Model No.VC006GM CORDLESS VACUUM CLEANER

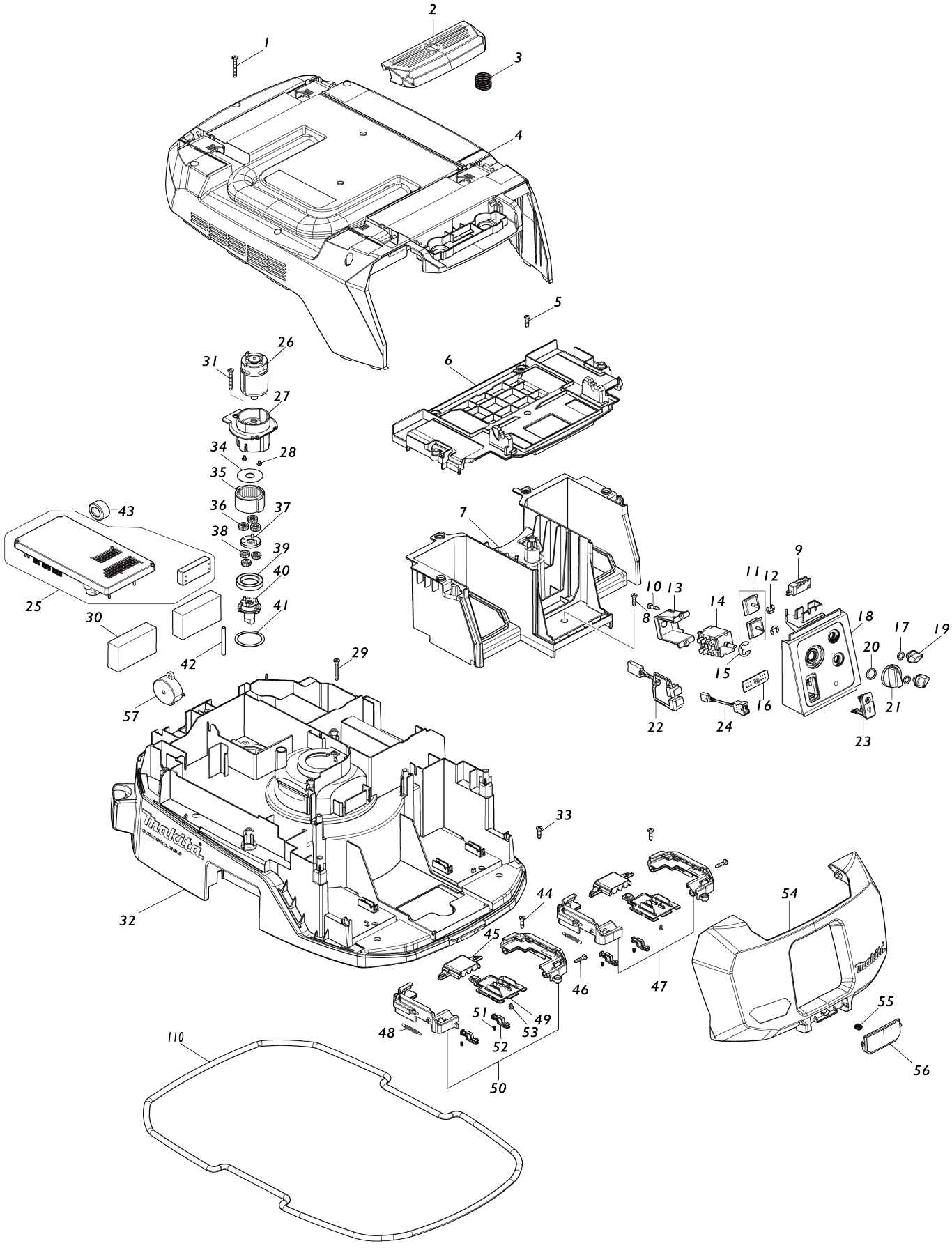

Model No.VC006GM CORDLESS VACUUM CLEANER

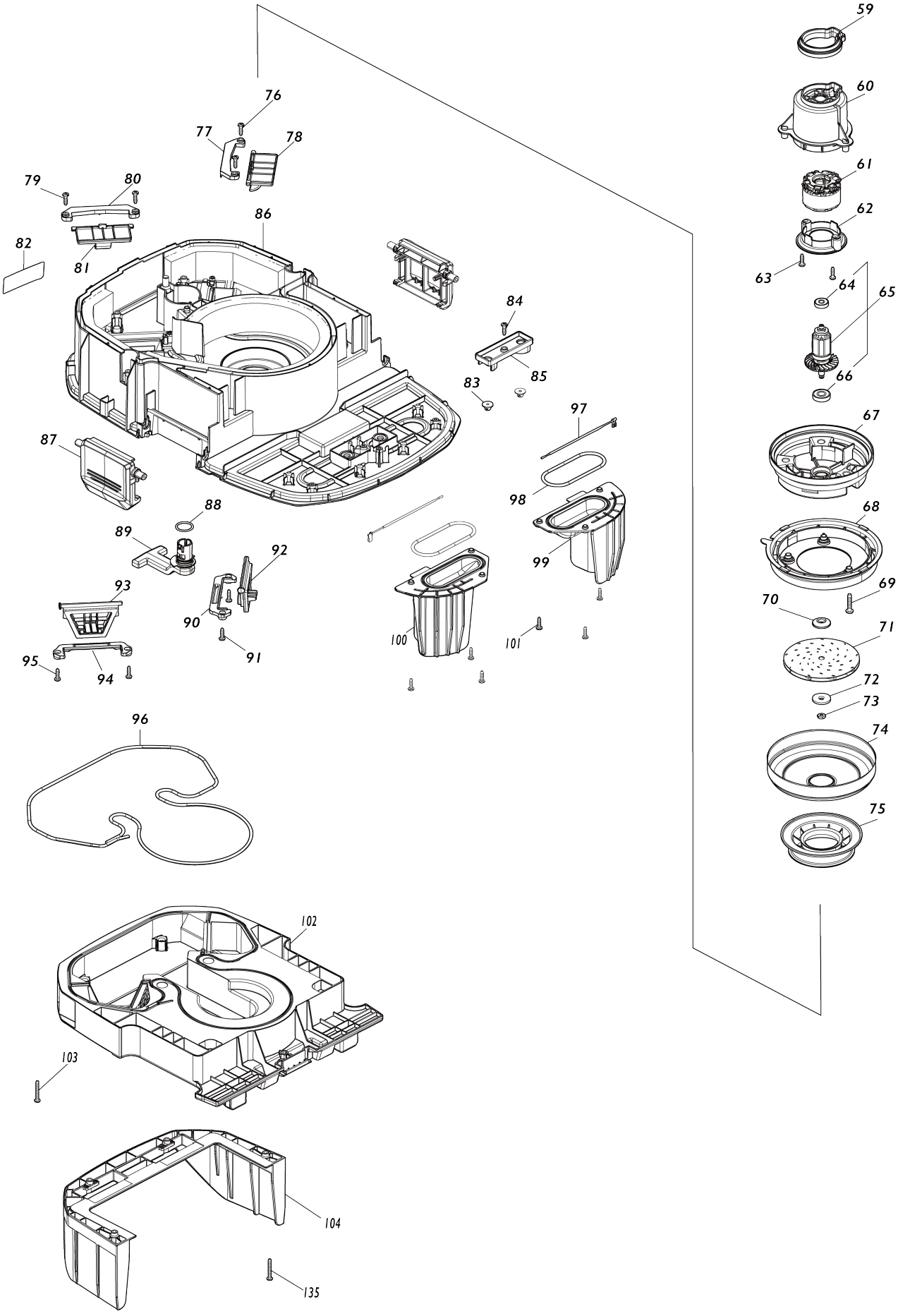

Model No.VC006GM CORDLESS VACUUM CLEANER

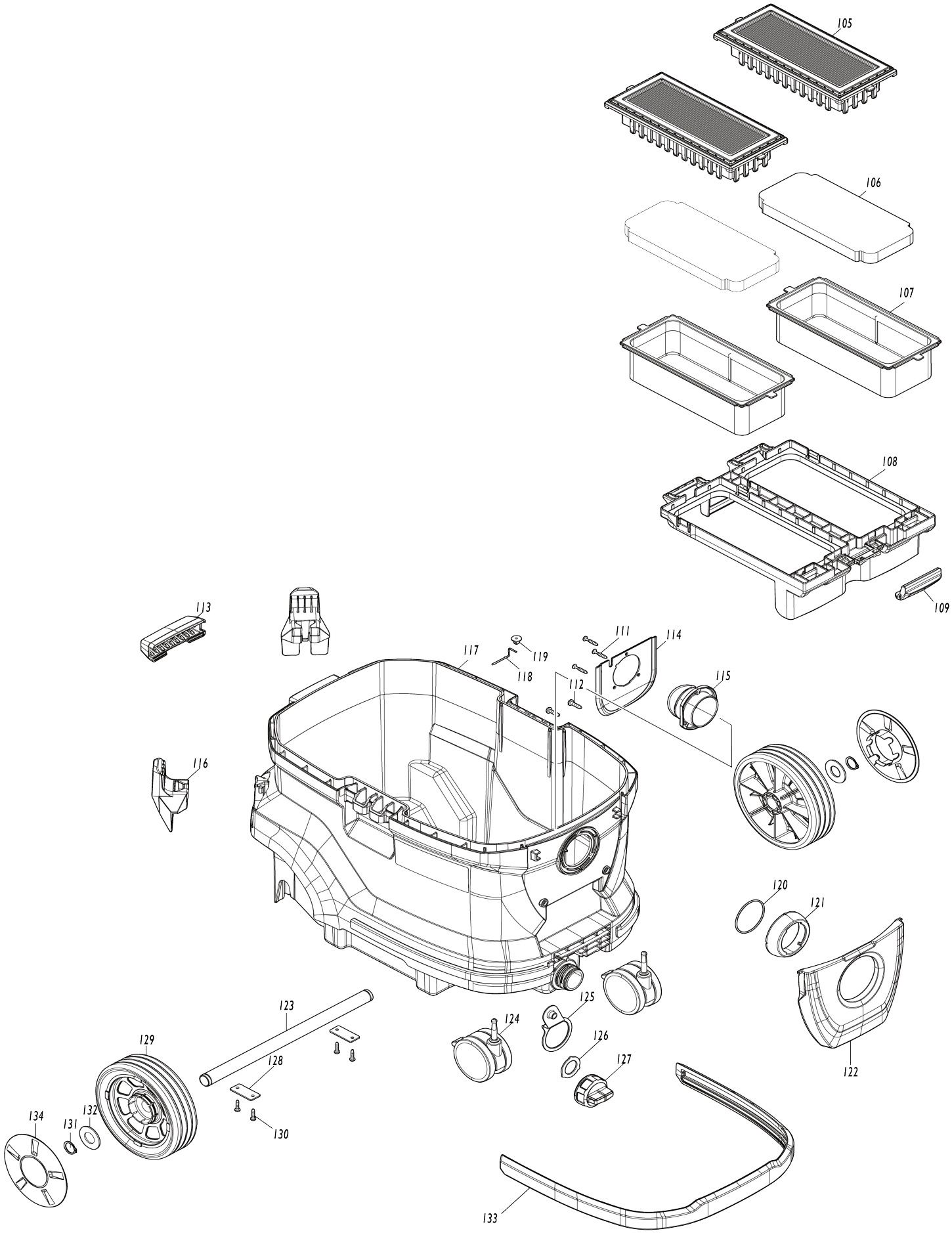

Model No.VC006GM CORDLESS VACUUM CLEANER

Item No.	Parts No.	Description	Interchangeability	Q'ty	New/ Old	Note1	Note2
001	266351-3	Binding head tapping screw 4X35		9			
002	413B26-9	Switch button		1			
003	234273-5	Compression spring 20		2			
004	141L64-8	Cowling complete		1			
C10	8059E1-0	Caution label		1			
C20	413K73-4	Grip		1			
C30	413K74-2	Latch		4			
005	266326-2	Binding head tapping screw 4X18		1			
006	413K69-5	Upper housing		1			
007	413K68-7	Lower housing		1			
008	266326-2	Binding head tapping screw 4X18		1			
009	651910-0	Switch D2VW-01-3HS		1			
010	266326-2	Binding head tapping screw 4X18		2			
011	620H02-4	Dial circuit		1			
012	961013-5	Stop ring (EXT) E-7		2			
013	451343-7	Switch holder		1			
014	650014-5	Switch 1703.4803		1			
015	961062-2	Stop ring (EXT) E-12		1			
016	620F40-4	Indication circuit		1			
017	213054-0	O-ring 9		2			
018	141L60-6	Switch base A complete		1			
C10	8056M2-6	Indication label		1			
019	451344-5	Switch dial		2			
020	213176-6	O-ring 14		1			
021	451342-9	Switch lever		1			
022	638A19-1	Lead unit		1			
023	141L63-0	Cap complete		1			
024	632L47-4	Connector unit		1			
025	620G99-7	Controller		1			
026	629B77-4	DC motor		1			
027	454207-4	Gear case		1			
028	911003-8	Pan head screw M3X6 WR		2			
029	266351-3	Binding head tapping screw 4X35		6			
030	422929-4	Rear block filter		2			
031	266351-3	Binding head tapping screw 4X35		2			
032	141L58-3	Separator complete		1			
033	266326-2	Binding head tapping screw 4X18		2			
034	267067-3	Flat washer 12		1			
035	226285-2	Internal gear 42		1			
036	226283-6	Spur gear 15		3			
037	153228-0	Spur gear 9 complete		1			
038	226284-4	Spur gear 15		3			

039	211375-4	Ball bearing 6805LLB		1			
040	135554-9	Spindle assembly		1			
041	267464-3	Flat washer 34		1			
042	684990-1	Vinyl tube		1			
043	688131-1	Line filter		1	*		
043-1	688131-1	Line filter	O	1			
044	266326-2	Binding head tapping screw 4X18		4			
045	413B40-5	Terminal cover		2			
046	266326-2	Binding head tapping screw 4X18		4			
047	183U06-0	Terminal case set		1			
048	232722-6	Tension spring 4		4			
049	632T08-2	Terminal unit		2	*		
049-1	632W79-7	TERMINAL UNIT	<	2			
050	183W98-1	Terminal case set		1			
051	232472-3	Compression spring 2		4			
052	413B41-3	Lock lever		4			
053	652031-1	Pan head screw M3X6		4			
054	183X55-5	Battery cover set		1			
C10	8059D9-7	XGT logo label		1			
055	231456-8	Compression spring 7		1			
056	413K71-8	Battery cover hook		1			
057	620J90-3	Buzzer circuit		1			
059	422926-0	Rubber ring		1			
060	413K59-8	Motor housing		1			
061	629B75-8	Stator		1			
062	413K60-3	Baffle plate		1			
063	266326-2	Binding head tapping screw 4X18		2			
064	210022-4	Ball bearing 626DDW		1			
065	519777-1	Rotor assembly		1	*		
065		INC. 64,66			*		
065-1	519777-1	Rotor assembly	O	1			
065-1		INC. 64,66					
066	211491-2	Ball bearing 609DDW		1			
067	413K61-1	Base		1			
068	413K62-9	Fan base		1			
069	266173-1	Binding head tapping screw 5X30		3	*		
069-1	266553-1	Binding head tapping screw 5X30	O	3			
070	313062-2	Flange		1			
071	240178-9	Fan 104		1			
072	253752-4	Flat washer 8		1			
073	252268-6	Hex. nut M6		1			
074	347A40-6	Fan cover		1			
075	422793-3	Support ring		1			
076	266326-2	Binding head tapping screw 4X18		2			
077	413K91-2	Outer valve holder		1			
078	141L70-3	Outer valve complete		1			
079	266326-2	Binding head tapping screw 4X18		2			

080	413K91-2	Outer valve holder		1			
081	141L70-3	Outer valve complete		1			
082	8581G7-3	Name plate VC006GM		1			
083	421468-1	Cord seal		2			
084	266326-2	Binding head tapping screw 4X18		1			
085	413K94-6	Seal stopper		1			
086	141L68-0	Tank cover complete		1			
087	413K83-1	Hook		2			
088	213304-3	O-ring 20		1			
089	413K93-8	Cam		1			
090	413K92-0	Inner valve holder		1			
091	266326-2	Binding head tapping screw 4X18		2			
092	141L71-1	Inner valve complete		1			
093	141L71-1	Inner valve complete		1			
094	413K92-0	Inner valve holder		1			
095	266326-2	Binding head tapping screw 4X18		2			
096	422944-8	Seal ring A		1			
097	638A41-8	Lead unit		2			
098	422932-5	Seal ring B		2			
099	413K75-0	Front stand L		1			
100	413K76-8	Front stand R		1			
101	266326-2	Binding head tapping screw 4X18		6			
102	413K84-9	Inner cover		1			
103	266351-3	Binding head tapping screw 4X35		4			
104	413K85-7	Rear stand		1			
105	1911B6-0	Powder filter M set		2			
106	1911B4-4	Damper set		2			
107	1911B5-2	Pre-filter set		2			
108	413K86-5	Top plate		1			
109	127480-6	Latch assembly		1			
110	422943-0	Seal ring C		1			
111	266374-1	Binding head tapping screw 4X25		3			
112	266420-0	Binding head tapping screw 5X20		2			
113	422934-1	Bumper B		1			
114	457853-2	Holder plate		1			
115	457852-4	Holder		1			
116	413K78-4	Hose hook		2			
117	141L65-6	Tank complete		1			
C10	800W80-2	Caution label		1			
118	649150-2	Earth line 120		1			
119	421468-1	Cord seal		1			
120	213655-4	O-ring 56		1			
121	457851-6	Inlet		1			
122	413K81-5	Inlet cover		1			
123	327A50-9	Joint pipe 20-343		1			
124	168547-1	Caster 75		2			
125	457862-1	Drain belt		1			

126	422179-1	Seal		1			
127	457861-3	Drain cap		1			
128	347A42-2	Plate		2			
129	413K79-2	Caster 170		2			
130	266326-2	Binding head tapping screw 4X18		4			
131	961060-6	Retaining ring (EXT) S-20		2			
132	267299-2	Flat washer 20		2			
133	422933-3	Bumper A		1			
134	413K80-7	Wheel cap		2			
135	266351-3	Binding head tapping screw 4X35		4			
A01	199455-5	Nozzle assembly set		1			
A02	195433-3	Hose complete 28-3.5 set		1			
C10	417191-4	Cuff lock		1			
C20	417586-1	Stopper		1			
C30	417662-1	Sleeve		1			
C40	417766-9	Front cuff 38		1			
C50	417765-1	Front cuff 22		1			
C60	424379-9	Front cuff 24		1			
A03	195434-1	Hose complete 38-2.5 set		1			
C10	417191-4	Cuff lock		1			
C20	417306-3	Sleeve		2			
C30	417307-1	Front cuff		1			
C40	417586-1	Stopper		2			
A04	1910Y4-9	Filter bag set		1			
A05	192563-1	Straight pipe set		1			
A06	192562-3	Bent pipe		1			
A07	410306-2	Corner nozzle		1			
A08	195547-8	Front cuff 22 set		1			
A09	195546-0	Front cuff 24 set		1			
A10	422A02-6	Cap		1			
A11	451350-0	Stopper		1			
A12	911138-5	Pan head screw M4X20 WR		1			
A13	198900-7	Wireless unit set		1	*		
A13-1	198900-7	Wireless unit set	O	1	*		
A13-2	198900-7	Wireless unit set	<	1			
F08	1910N0-0	Filter for water set		1			
F09	1910R3-2	Poly bag set		1			
F10	1910Y4-9	Filter bag set		1			
F11	1911B4-4	Damper set		1			
F12	1911B5-2	Pre-filter set		1			
F13	1911B6-0	Powder filter M set		1			
F14	1911B7-8	Powder filter H set		1			
F42	1912F9-8	Nozzle assembly set		1			
F43	1914Y6-9	Rotary brush nozzle set		1			
F44	1914Y7-7	Rotary brush nozzle set		1			
F45	1915W7-9	BRUSH COMPLETE SET		1			
F96	422A02-6	Cap		1			
G09	1912G4-5	Telescopic pipe complete set		1			
G10	1912G5-3	Bent pipe complete set		1			
G11	413R35-4	Stopper		1			