Model No.VC005GL CORDLESS VACUUM CLEANER

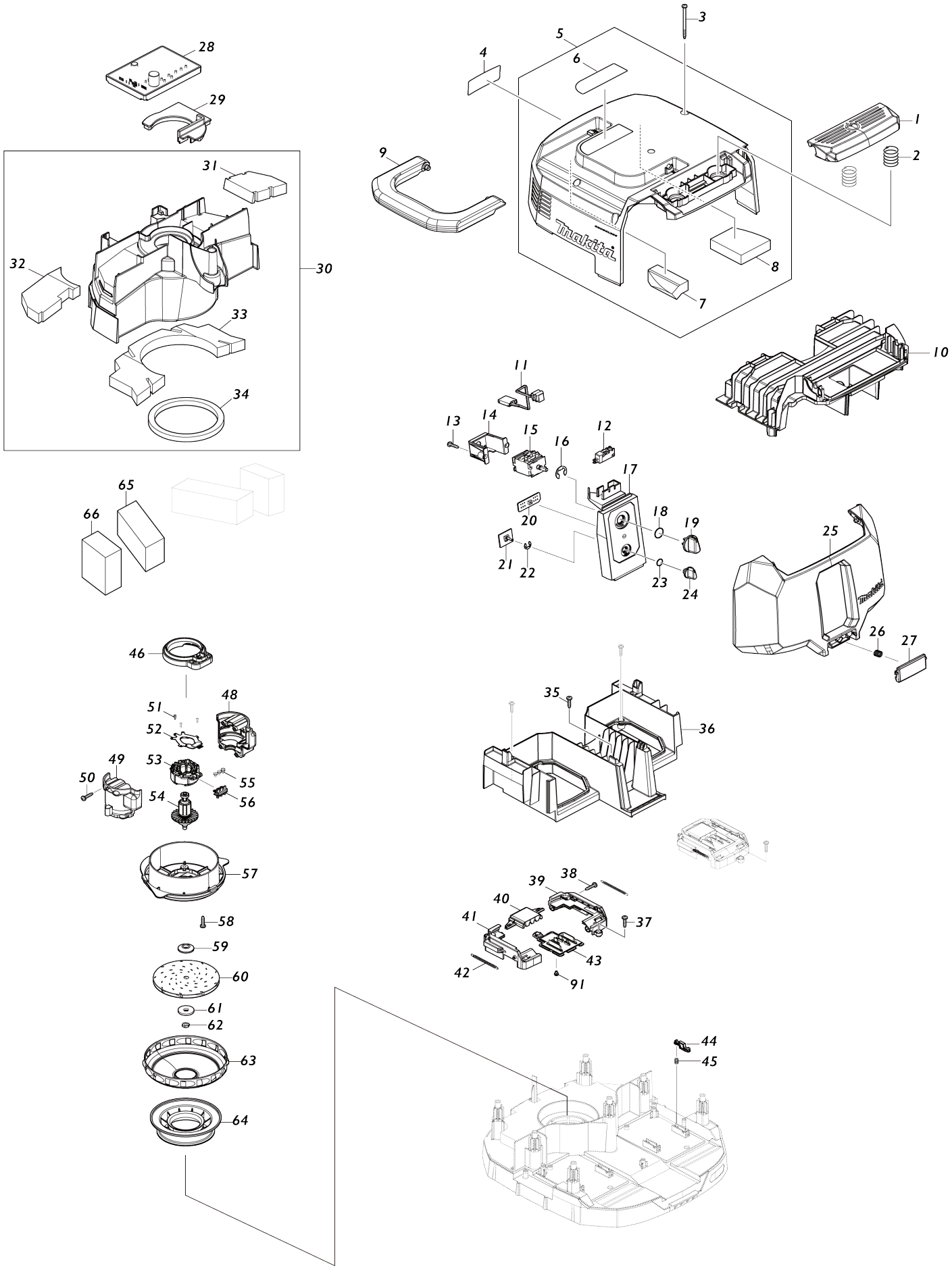

Model No.VC005GL CORDLESS VACUUM CLEANER

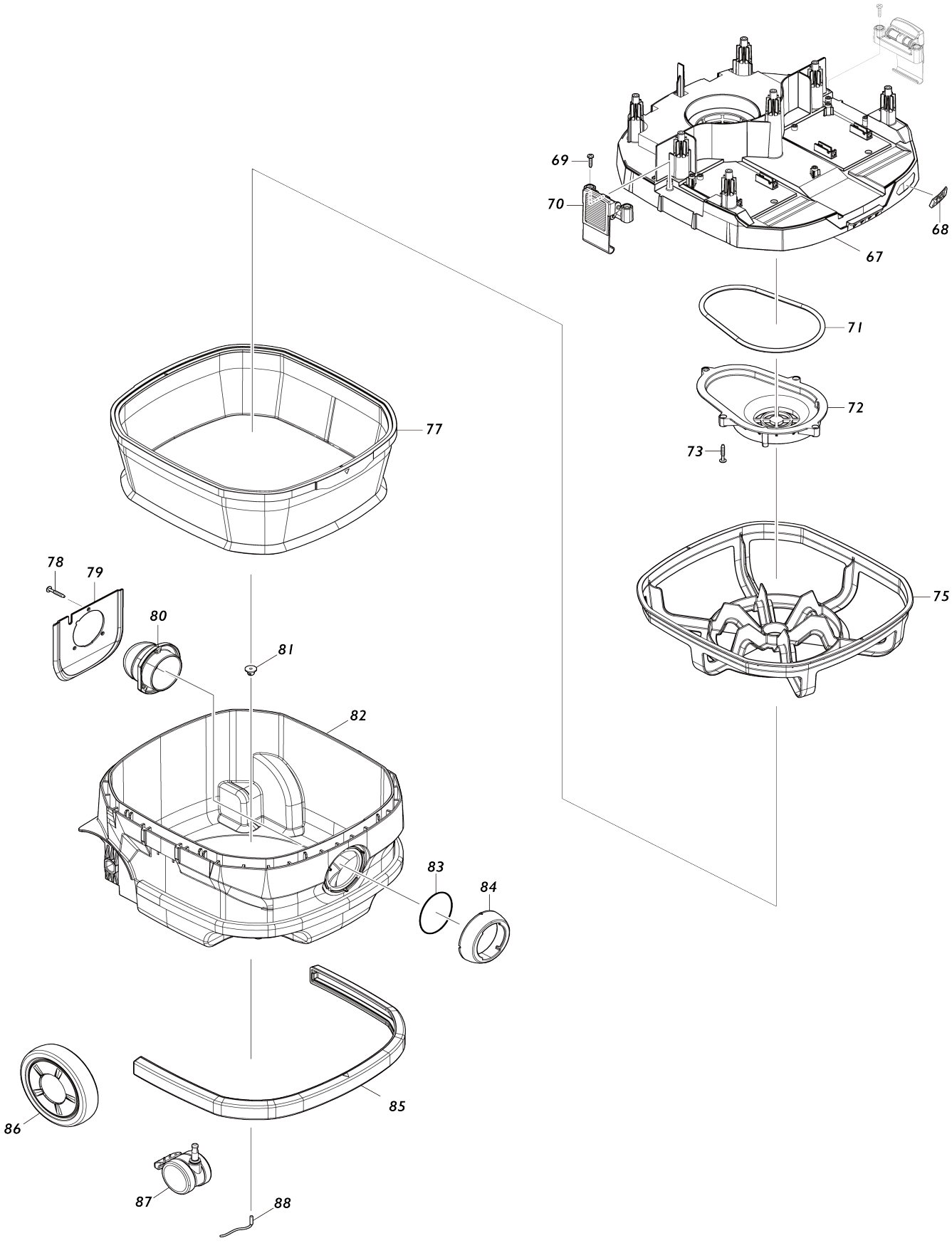

Model No.VC005GL CORDLESS VACUUM CLEANER

Item No.	Parts No.	Description	Interchangeability	Q'ty	New/ Old	Note1	Note2
001	413B26-9	SWITCH BUTTON		1			
002	234273-5	COMPRESSION SPRING 20		2			
003	266340-8	TAPPING SCREW 4X65		7			
004	8112N6-1	VC005GL NAME PLATE		1			
005	141F78-1	COWLING COMPLETE		1			
005		INC. 6-8					
006	813A18-6	CAUTION LABEL		1			
007	422796-7	TOP DAMPER A		1			
008	422797-5	TOP DAMPER B		1			
009	413B27-7	GRIP		1			
010	413B33-2	UPPER HOUSING		1			
011	638A20-6	LEAD UNIT		1			
012	651910-0	SWITCH D2VW-01-3HS		1			
013	266326-2	TAPPING SCREW 4X18		2			
014	451343-7	SWITCH HOLDER		1			
015	650013-7	SWITCH 1703.4002		1			
016	961062-2	STOP RING E-12		1			
017	141H90-3	SWITCH BASE COMPLETE		1			
C10	8045P7-8	INDICATION LABEL		1			
018	213176-6	O RING 14		1			
019	455733-6	SWITCH LEVER		1			
020	620F40-4	INDICATION CIRCUIT		1			
021	620D39-7	SUB CONTROLLER		1			
022	961013-5	STOP RING E-7		1			
023	213054-0	O RING 9		1			
024	451344-5	SWITCH DIAL		1			
025	413B28-5	BATTERY COVER		1			
026	231456-8	COMPRESSION SPRING 7		1			
027	413B30-8	BATTERY COVER HOOK		1			
028	620F37-3	CONTROLLER		1			
029	422795-9	RUBBER CAP		1			
030	141F84-6	SEPARATOR COMPLETE		1			
030		INC. 31-34					
031	422802-8	BAND DUMPER E		1			
032	422801-0	BAND DUMPER D		1			
033	422799-1	BAND DUMPER B		1			
034	422804-4	SEAL A		1			
035	266326-2	TAPPING SCREW 4X18		3			
036	413B31-6	LOWER HOUSING		1			
037	266326-2	TAPPING SCREW 4X18		4			
038	266326-2	TAPPING SCREW 4X18		4			
039	183U06-0	TERMINAL CASE SET		2			
039		INC. 41					
040	413B40-5	TERMINAL COVER		2			
041	183U06-0	TERMINAL CASE SET		2			
041		INC. 39					
042	232722-6	TENSION SPRING 4		4			

043	632T08-2	TERMINAL UNIT		2	*		
043-1	632W79-7	TERMINAL UNIT	<	2			
044	413B41-3	LOCK LEVER		4			
045	232472-3	COMPRESSION SPRING 2		4			
046	422794-1	RUBBER RING		1			
048	183U05-2	MOTOR HOUSING SET		1			
048		INC. 49					
049	183U05-2	MOTOR HOUSING SET		1			
049		INC. 48					
050	266326-2	TAPPING SCREW 4X18		4			
051	266490-9	TAPPING SCREW PT 2X6		3			
052	620F39-9	CONTROLLER B		1			
053	629A83-3	STATOR		1			
054	619704-9	ROTOR		1			
055	652069-6	FLAT HEAD SCREW M3X6		3			
056	632S88-2	LEAD UNIT		1			
057	413B45-5	FAN BASE		1			
058	266326-2	TAPPING SCREW 4X18		3			
059	313062-2	FLANGE		1			
060	240178-9	FAN 104		1			
061	253752-4	FLAT WASHER 8		1			
062	252268-6	HEX. NUT M6		1			
063	347171-5	FAN COVER		1			
064	422793-3	SUPPORT RING		1			
065	422803-6	REAR BLOCK FILTER A		2			
066	422819-1	REAR BLOCK FILTER B		2			
067	141G68-0	TANK COVER COMPLETE		1			
C10	422798-3	BAND DUMPER A		1			
068	8030S0-0	XGT LOGO LABEL		1			
069	266326-2	TAPPING SCREW 4X18		4			
070	162A10-2	HOOK COMPLETE		2			
071	422805-2	SEAL RING		1			
072	413B22-7	LOWER TANK COVER		1			
073	266374-1	TAPPING SCREW 4X25		4			
075	413B46-3	FILTER CAGE		1			
077	141F85-4	CLOTH FILTER COMPLETE		1	*		
077-1	191V71-1	CLOTH FILTER SET	O	1			
078	266374-1	TAPPING SCREW 4X25		3			
079	457853-2	HOLDER PLATE		1			
080	457852-4	HOLDER		1			
081	421468-1	CORD SEAL		1			
082	413B47-1	TANK		1			
083	213655-4	O RING 56		1			
084	457851-6	INLET		1			
085	422806-0	BUMPER		1			
086	141F86-2	CASTER 120 COMPLETE		2			
C10	413B49-7	SHAFT		2			
087	162A11-0	CASTER 50		2	*		
087-1	162D18-4	CASTER 50	O	2			
088	649150-2	EARTH LINE 120		1			
091	652031-1	PAN HEAD SCREW M3X6		4			
A01	191G86-8	NOZZLE ASSEMBLY SET		1			

A02	140G19-0	TELESCOPIC PIPE COMPLETE		1			
A03	140G26-3	BENT PIPE COMPLETE		1			
A04	199493-7	HOSE COMPLETE 32-1.7 SET		1			
A05	195432-5	POLY BAG SET(650X650)		1			
A06	413B37-4	MULTI HOOK		1			
A07	451350-0	STOPPER		1			
A08	198919-6	LONG SASH NOZZLE SET 28 WHI		1			
A09	911133-5	PAN HEAD SCREW M4X18		1			
E01	891978-6	CAUTION LABEL		1			
F15	191E30-3	FLEXIBLE HOSE SET(LOCK)		1			
F17	191G87-6	NOZZLE ASSEMBLY SET		1			
F18	191G89-2	TELESCOPIC PIPE SET		1			
F19	191M77-5	JOINT A 32 SET		1			
F20	191M78-3	JOINT B 35 SET		1			
F21	191M79-1	JOINT C 38 SET		1			
F23	191V68-0	DAMPER SET		1			
F24	191V69-8	PRE FILTER SET		1			
F25	191V70-3	POWDER FILTER H SET		1			
F28	192236-6	TAPERED NOZZLE SET		1			
F31	195432-5	POLY BAG SET(650X650)		1			
F34	195435-9	HOSE COMPLETE 38-5 SET		1			
F35	195436-7	HOSE COMPLETE 28-5 SET		1			
F36	195437-5	HOSE COMPLETE 28-2.5 SET		1			
F38	195545-2	FRONT CUFF 38 SET		1			
F39	195546-0	FRONT CUFF 24 SET		1			
F40	195547-8	FRONT CUFF 22 SET		1			
F41	195548-6	JOINT 22-38 SET		1			
F42	195549-4	T-NOZZLE ASSY A SET(DRY)38		1			
F44	195551-7	T-NOZZLE SET 38		1			
F45	195557-5	FILTER BAG SET 15L(5PCS)		1	*		
F45-1	1912R3-4	FILTER BAG SET	O	1			
F49	198184-7	F/C SWITCHING T-NOZZLE 38		1			
F53	198529-9	FLOOR/CARPET T-NOZZLE BLK E U		1			
F55	198533-8	F/C SWITCHING T-NOZZLE 38 EU		1			
F56	198540-1	SHELF BRUSH SET28 BLK EU		1			
F57	198555-8	ROUND BRUSH SET 28 BLK EU		1			
F59	198560-5	TELESCOPIC PIPE SET 28 EU		1			
F60	198730-6	MAKPAC ADAPTER SET		1	*		
F62	198873-4	SHELF BRUSH SET28 WHI		1			
F63	198878-4	ROUND BRUSH SET 28 WHI		1			
F64	198919-6	LONG SASH NOZZLE SET 28 WHI		1			
F65	198992-6	LONG SASH NOZZLE SET 28 BLK		1			
F66	199038-1	SEAT NOZZLE SET 28 WHI		1			
F67	199039-9	SEAT NOZZLE SET 28 BLK		1			
F69	199439-3	CREVICE NOZZLE 415 SET		1			
F73	199843-6	PIPE 465 COMPLETE SET		1			
F74	199844-4	JOINT PIPE 465 SET		1			
F89	1914Y6-9	Rotary brush nozzle set		1			
F90	1914Y7-7	Rotary brush nozzle set		1			
F91	1915W7-9	BRUSH COMPLETE SET		1			
G09	1912G4-5	TELESCOPIC PIPE COMPLETE SET		1			

G10	1912G5-3	BENT PIPE COMPLETE SET		1			
G11	413R35-4	STOPPER		1			

Please state Parts No. when your order.

Print Date 06/17/2025