Model No.VC004GL Cordless Vacuum Cleaner

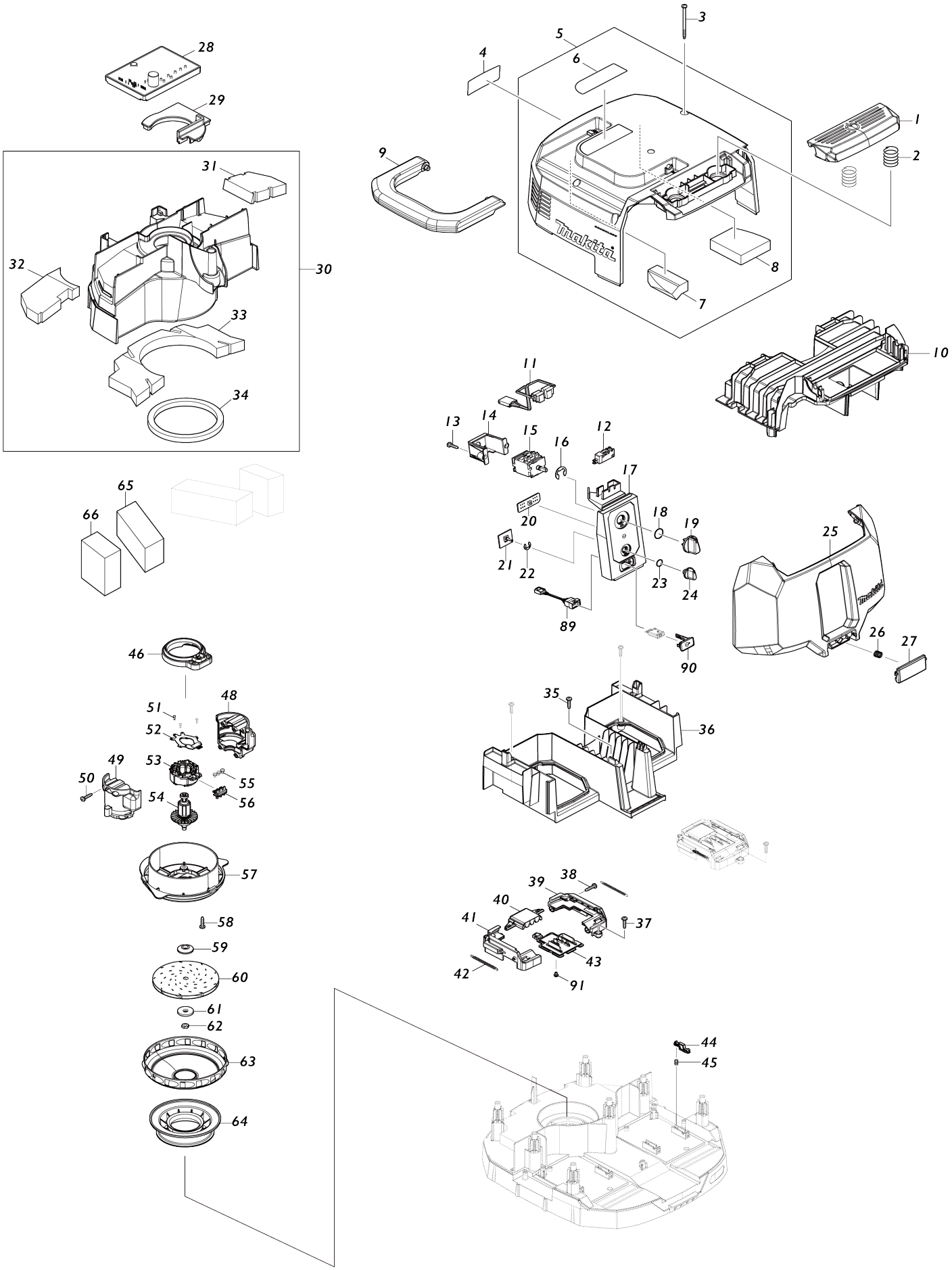

Model No.VC004GL Cordless Vacuum Cleaner

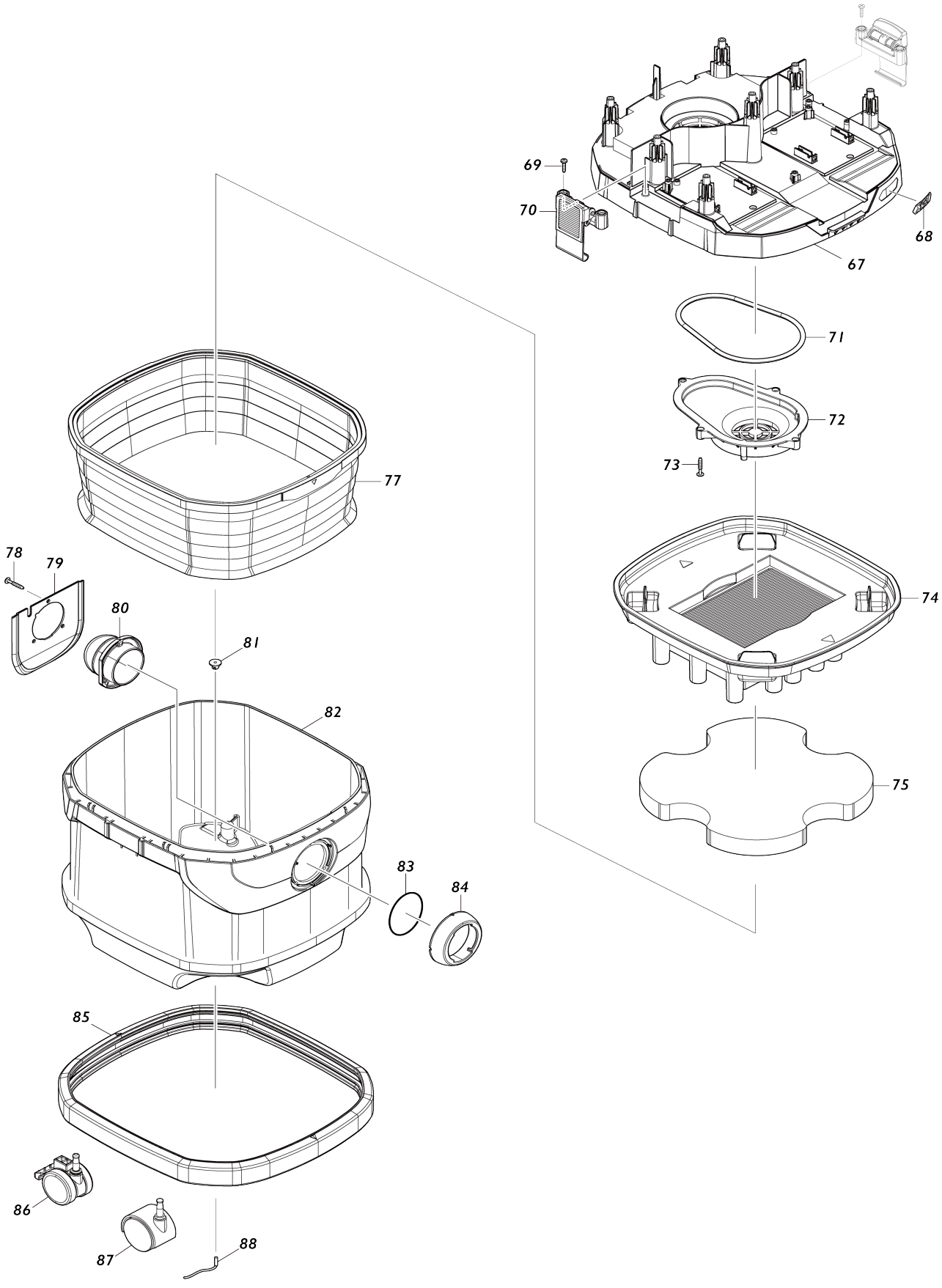

Model No.VC004GL Cordless Vacuum Cleaner

Item No.	Parts No.	Description	Interchangeability	Q'ty	New/ Old	Note1	Note2
001	413B26-9	Switch button		1			
002	234273-5	Compression spring 20		2			
003	266340-8	Binding head tapping screw 4X65		7			
004	8112M5-6	Name plate VC004GL		1			
005	141F80-4	Cowling complete		1			
005		INC. 6-8					
006	813A18-6	Caution label		1			
007	422796-7	Top damper A		1			
008	422797-5	Top damper B		1			
009	413B27-7	Grip		1			
010	413B33-2	Upper housing		1			
011	638A19-1	Lead unit		1			
012	651910-0	Switch D2VW-01-3HS		1			
013	266326-2	Binding head tapping screw 4X18		2			
014	451343-7	Switch holder		1			
015	650014-5	Switch 1703.4803		1			
016	961062-2	Stop ring (EXT) E-12		1			
017	141F76-5	Switch base complete		1			
C10	8040N0-8	Indication label		1			
018	213176-6	O-ring 14		1			
019	455733-6	Switch lever		1			
020	620F40-4	Indication circuit		1			
021	620D39-7	Sub controller		1			
022	961013-5	Stop ring (EXT) E-7		1			
023	213054-0	O-ring 9		1			
024	451344-5	Switch dial		1			
025	413B29-3	Battery cover		1	*		
025-1	413B28-5	Battery cover	O	1			
026	231456-8	Compression spring 7		1			
027	413B30-8	Battery cover hook		1			
028	620F38-1	Controller		1			
029	422795-9	Rubber cap		1			
030	141F84-6	Separator complete		1			
030		INC. 31-34					
031	422802-8	Band damper E		1			
032	422801-0	Band damper D		1			
033	422799-1	Band damper B		1			
034	422804-4	Seal A		1			
035	266326-2	Binding head tapping screw 4X18		3			
036	413B31-6	Lower housing		1			
037	266326-2	Binding head tapping screw 4X18		4			
038	266326-2	Binding head tapping screw 4X18		4			
039	183U06-0	Terminal case set		2			
039		INC. 41					

040	413B40-5	Terminal cover		2			
041	183U06-0	Terminal case set		2			
041		INC. 39					
042	232722-6	Tension spring 4		4			
043	632T08-2	Terminal unit		2	*		
043-1	632W79-7	Terminal unit	<	2			
044	413B41-3	Lock lever		4			
045	232472-3	Compression spring 2		4			
046	422794-1	Rubber ring		1			
048	183U05-2	Motor housing set		1			
048		INC. 49					
049	183U05-2	Motor housing set		1			
049		INC. 48					
050	266326-2	Binding head tapping screw 4X18		4			
051	266490-9	Pan head tapping screw 2X6		3			
052	620F39-9	Controller B		1			
053	629A83-3	Stator		1			
054	619704-9	Rotor		1			
055	652069-6	Flat head screw M3X6		3			
056	632S88-2	Lead unit		1			
057	413B45-5	Fan base		1			
058	266326-2	Binding head tapping screw 4X18		3			
059	313062-2	Flange		1			
060	240178-9	Fan 104		1			
061	253752-4	Flat washer 8		1			
062	252268-6	Hex. nut M6		1			
063	347171-5	Fan cover		1			
064	422793-3	Support ring		1			
065	422803-6	Rear block filter A		2			
066	422819-1	Rear block filter B		2			
067	141F83-8	Tank cover complete		1			
C10	422798-3	Band damper A		1			
068	8030S0-0	XGT logo label		1			
069	266326-2	Binding head tapping screw 4X18		4			
070	162A10-2	Hook complete		2			
071	422805-2	Seal ring		1			
072	413B22-7	Lower tank cover		1			
073	266374-1	Binding head tapping screw 4X25		4			
074	191V70-3	Powder filter H set		1			
075	191V68-0	Damper set		1			
077	191V69-8	Pre-filter set		1			
078	266374-1	Binding head tapping screw 4X25		3			
079	457853-2	Holder plate		1			
080	457852-4	Holder		1			
081	421468-1	Cord seal		1			
082	457855-8	Tank		1			
083	213655-4	O-ring 56		1			
084	457851-6	Inlet		1			

085	422176-7	Bumper		1			
086	168535-8	Caster 50		2	*		
086-1	162C28-5	Caster 50	O	2			
087	168434-4	Caster 50		2	*		
087-1	162C27-7	Caster 50	O	2			
088	649150-2	Earth line 120		1			
089	632L47-4	Connector unit		1			
090	140G18-2	Cap complete		1			
C10	213A05-9	O-ring 16		1			
C20	818F57-1	Cap label		1			
091	652031-1	Pan head screw M3X6		4			
A01	199455-5	Nozzle assembly set		1			
A02	195433-3	Hose complete 28-3.5 set		1			
C10	417191-4	Cuff lock		1			
C20	417586-1	Stopper		1			
C30	417662-1	Sleeve		1			
C40	417766-9	Front cuff 38		1			
C50	417765-1	Front cuff 22		1			
C60	424379-9	Front cuff 24		1			
A03	195434-1	Hose complete 38-2.5 set		1			
C10	417191-4	Cuff lock		1			
C20	417306-3	Sleeve		2			
C30	417307-1	Front cuff		1			
C40	417586-1	Stopper		2			
A04	195432-5	Poly bag set		1			
A05	198900-7	Wireless unit set		1	*		
A05-1	198900-7	Wireless unit set	<	1	*		
A05-2	198900-7	Wireless unit set	O	1	*		
A05-3	198900-7	Wireless unit set	<	1			
A06	192563-1	Straight pipe set		1			
A07	192562-3	Bent pipe		1			
A08	410306-2	Corner nozzle		1			
A09	413B37-4	Multi hook		1			
A10	451350-0	Stopper		1			
A11	911138-5	Pan head screw M4X20 WR		1			
A12	195547-8	Front cuff 22 set		1			
A13	195546-0	Front cuff 24 set		1			
E01	891978-6	Caution label		1			
F15	191E30-3	Flexible hose with lock set		1			
F17	191G87-6	Nozzle assembly set		1			
F18	191G89-2	Telescopic pipe set		1	*		
F18-1	191G89-2	Telescopic pipe set	O	1			
F19	191M77-5	Joint A32 set		1			
F20	191M78-3	Joint B35 set		1			
F21	191M79-1	Joint C38 set		1			
F23	191V68-0	Damper set		1			
F24	191V69-8	Pre-filter set		1			
F25	191V70-3	Powder filter H set		1			
F28	192236-6	Anchor nozzle set		1			
F31	195432-5	Poly bag set		1			
F34	195435-9	Hose complete 38-5 set		1			
F35	195436-7	Hose complete 28-5 set		1			

F36	195437-5	Hose complete 28-2.5 set		1			
F38	195545-2	Front cuff 38 set		1			
F39	195546-0	Front cuff 24 set		1			
F40	195547-8	Front cuff 22 set		1			
F41	195548-6	Joint 22-38 set		1			
F42	195549-4	Nozzle assembly A set		1			
F44	195551-7	Nozzle assembly set		1			
F45	195557-5	Filter bag set		1	*		
F45-1	195557-5	Filter bag set	O	1			
F49	198184-7	Nozzle assembly set		1			
F53	198529-9	Nozzle assembly set		1			
F55	198533-8	Nozzle assembly set		1			
F56	198540-1	Shelf brush set		1			
F57	198555-8	Round brush set		1			
F59	198560-5	Telescopic pipe assembly set		1			
F60	198730-6	MAKPAC adapter set		1	*		
F62	198873-4	Shelf brush set		1			
F63	198878-4	Round brush set		1			
F64	198919-6	Long corner nozzle set		1			
F65	198992-6	Long corner nozzle set		1			
F66	199038-1	Seat nozzle set		1			
F67	199039-9	Seat nozzle set		1			
F69	199439-3	Crevice nozzle 415 set		1			
F73	199843-6	Pipe 465 complete set		1			
F74	199844-4	Joint pipe 465 set		1			
F86-1	198900-7	Wireless unit set	<	1	*		
F86-2	198900-7	Wireless unit set	O	1	*		
F86-3	198900-7	Wireless unit set	<	1			
F89	191X62-4	Telescopic pipe complete set		1	*		
F89-1	191X62-4	Telescopic pipe complete set	O	1			
F90	1912F9-8	Nozzle assembly set		1			
F91	1914Y6-9	Rotary brush nozzle set		1			
F92	1914Y7-7	Rotary brush nozzle set		1			
F93	1915W7-9	Brush complete set		1			
G09	1912G4-5	Telescopic pipe complete set		1			
G10	1912G5-3	Bent pipe complete set		1			
G11	413R35-4	Stopper		1			