Model No.UT001G Cordless Mixer

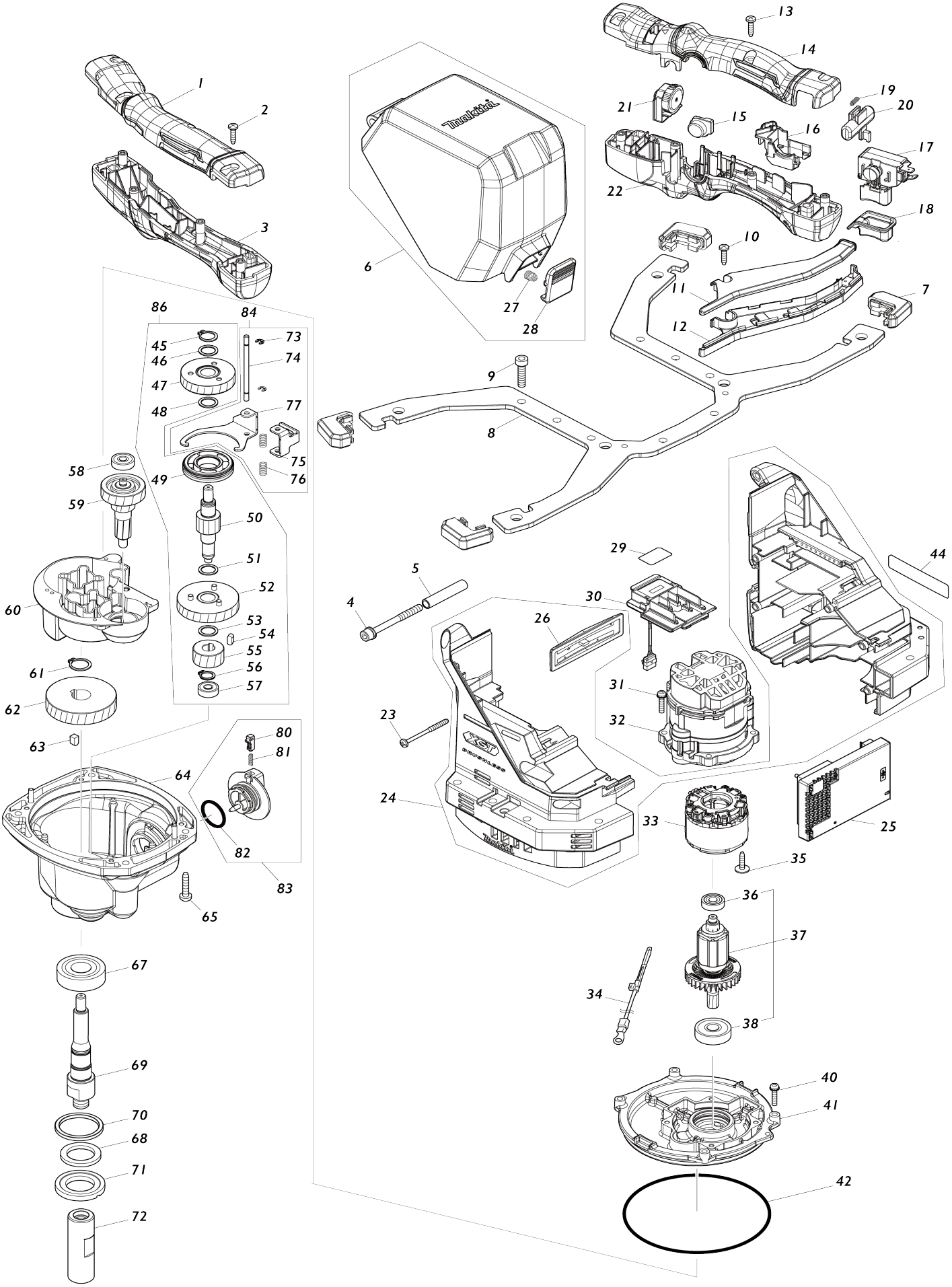

Model No.UT001G Cordless Mixer

Item No.	Parts No.	Description	Interchangeability	Q'ty	New/ Old	Note1	Note2
001	183X11-5	Left grip set		1			
001		INC. 3					
002	266326-2	Binding head tapping screw 4X18		4			
003	183X11-5	Left grip set		1			
003		INC. 1					
004	922383-7	Hex. socket head bolt M6X60 WR		1			
005	257885-7	Sleeve 6		1			
006	122D95-8	Cover L assembly		1			
006		INC. 27,28					
007	422906-6	Handle guard		4			
008	347A13-9	Handle		1			
009	922342-1	Hex. socket head bolt M6X25		8			
010	266326-2	Binding head tapping screw 4X18		1			
011	413J45-3	Handle cover		1			
012	413J46-1	Lead holder		1			
013	266326-2	Binding head tapping screw 4X18		4			
014	183X10-7	Right grip set		1			
014		INC. 22					
015	458819-5	Lock on button cover		1			
016	413J58-4	Switch support		1			
017	650035-7	Switch C3JW-4BM-1L-R		1			
018	458816-1	Switch cover		1			
019	231433-0	Compression spring 4		1			
020	412551-5	Lock off button		1	*		
020-1	4137J5-7	Lock off button	<	1	*		
020-2	4137P6-7	LOCK OFF BUTTON	<	1			
021	620E29-6	Dial circuit		1			
022	183X10-7	Right grip set		1			
022		INC. 14					
023	266467-4	Binding head tapping screw 4X50		6			
024	183X09-2	Housing set		1			
C10	263005-3	Rubber pin 6		2			
C20	8032A7-2	XGT logo label		1			
C30	8015N5-9	Label M12/M14		1			
024		INC. 26					
025	620K02-2	Controller		1			
026	413J49-5	Logo plate		1			
027	232676-7	Compression spring 7		1			
028	413J53-4	Hook		1			
029	8584E0-1	Serial No. label UT001G		1			
030	632P49-4	Terminal unit		1	*		
030-1	632W77-1	Terminal unit	<	1			
031	911138-5	Pan head screw M4X20 WR		4			
032	413J44-5	Motor housing		1			
033	629B88-9	Stator		1	*		

033-1	629C99-0	Stator	S	1			
034	638A44-2	Lead unit		1			
035	265620-9	Flange tapping screw 4X18		2			
036	211022-7	Ball bearing 607ZZ		1			
037	519789-4	Rotor assembly		1			
037		INC. 36,38					
038	211087-9	Ball bearing 6200DDW		1			
040	911138-5	Pan head screw M4X20 WR		4			
041	136830-4	Motor bracket assembly		1			
C10	213406-5	O-ring 30		1			
042	213A27-9	O-ring 115		1			
044	8584D8-8	Name plate UT001G		1			
045	961052-5	Retaining ring (EXT) S-12		1			
046	267104-3	Flat washer 12		1			
047	141K49-8	Spur gear 42 complete		1			
048	267104-3	Flat washer 12		1			
049	313437-5	Speed change ring		1			
050	327A22-4	Shaft		1			
051	267104-3	Flat washer 12		1			
052	141K50-3	Spur gear 49 complete		1			
053	267104-3	Flat washer 12		1			
054	254239-9	Key 4		1			
055	227984-9	Helical gear 13		1			
056	961006-2	Retaining ring (EXT) S-10		1			
057	211012-0	Ball bearing 606ZZ		1			
058	211016-2	Ball bearing 626LLB		1			
059	141N61-6	Spur gear 10-16 complete		1			
060	413J48-7	Gear cover		1			
061	961056-7	Retaining ring (EXT) S-16		1			
062	227985-7	Helical gear 34		1			
063	254211-1	Key 5		1			
064	136891-4	Gear case assembly		1			
C10	213507-9	O-ring 40		1			
065	266459-3	Binding head tapping screw 5X25		4			
067	211278-2	Ball bearing 6203DDW		1			
068	422905-8	Felt ring 24		1			
069	327A23-2	Spindle		1			
070	257884-9	Ring 33		1			
071	285821-3	Bearing retainer 22-41		1			
072	327B34-3	Shaft holder 1/2-M12		1			
073	961017-7	Stop ring (EXT) E-3		2			
074	256A24-2	Pin 4		1			
075	347A11-3	Change plate A		1			
076	234218-3	Compression spring 5		2			
077	347A12-1	Change plate B		1			
080	161568-2	Lock button complete		1			
081	232344-2	Compression spring 3		1			
082	213370-0	O-ring 22		1			
083	136822-3	Change lever assembly		1			
083		INC. 80-82					
084	136821-5	Change plate assembly		1			

084		INC. 73-77					
086	136892-2	Gear assembly		1			
086		INC. 45-57					
087	620N49-4	Controller B	S	1			
088	638A31-1	Lead unit	S	1			
089	652119-7	Pan head screw M2X6	S	6			
A01	A-43773	SHAFT COMPLETE		1	*		
A01-1	168369-9	Shaft complete	O	1			
A02	265440-1	Hex. head bolt M8X16		1			
A03	A-43717	MIXING BLADE		1			
A03		INC. A02					
A04	781006-4	Wrench 13		1			
A05	781010-3	Wrench 19		1			
A06B	***DC40RA	DC40RA FAST CHARGER		1			
A06B		COMPO-PARTS					
A07B	191B26-6	Battery BL4040 set		1			
A08	327B35-1	Shaft holder 1/2-M14		1			
F01	1911R6-2	Cover L set		1			

Please state Parts No. when your order.

Print Date 08/17/2026