Model No.UR014G Cordless Grass Trimmer

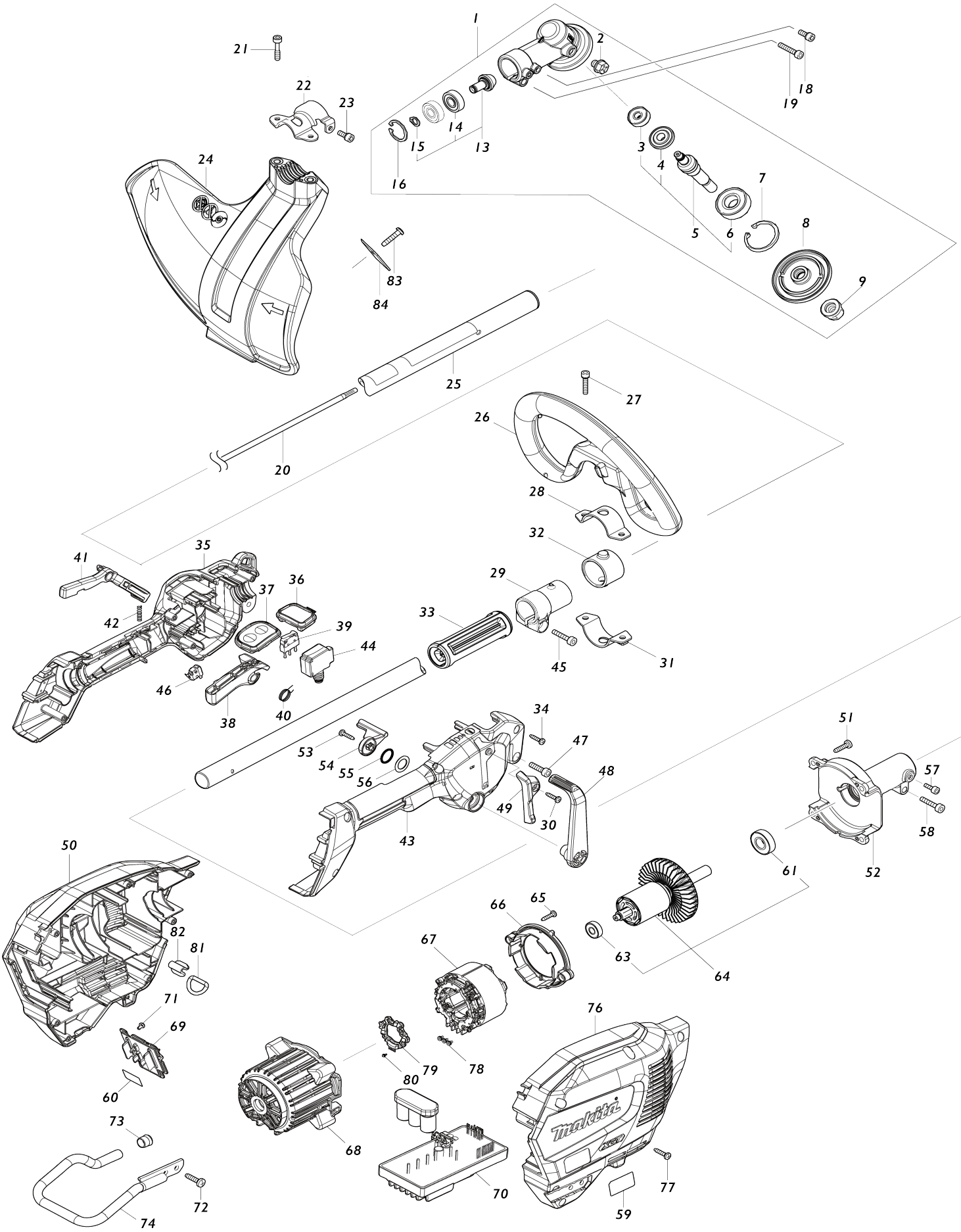

Model No.UR014G Cordless Grass Trimmer

Item No.	Parts No.	Description	Interchangeability	Q'ty	New/ Old	Note1	Note2
001	122D73-8	Gear case assembly R		1			
001		INC. 2,5,7-9,13,16					
002	265590-2	Hex. head bolt M8X10 R		1			
003	210030-5	Ball bearing 627ZZ		1			
004	227A47-7	Zerol bevel gear 21		1			
005	136860-5	Cutter shaft US assembly		1			
005		INC. 3,4,6					
006	211228-7	Ball bearing 6202DDW		1			
007	259069-3	Retaining ring (INT) R-35		1			
008	327B76-7	Receive washer R		1			
009	252236-9	Hex. lock nut M10-17		1			
013	136861-3	Spiral bevel gear assembly		1			
013		INC. 14,15					
014	210157-1	Ball bearing 609ZZ		2			
015	259071-6	Retaining ring (EXT) S-9		1			
016	259072-4	Retaining ring (INT) R-24		1			
018	922216-6	Hex. socket head bolt M5X14 W		1			
019	922353-6	Hex. socket head bolt M6X30 WR		1			
020	327056-1	Shaft		1			
021	266280-0	Hex. socket head bolt M6X25		2			
022	347B13-5	Protector clamp 25G		1			
023	922216-6	Hex. socket head bolt M5X14 W		1			
024	413N78-2	Protector 450		1			
025	141N31-5	Shaft pipe complete C		1			
C10	819312-8	Makita logo label		1			
C20	8063Y2-5	Caution label		1			
026	457267-5	Loop handle		1			
027	922234-4	Hex. socket head bolt M5X20 WG		2			
028	347113-9	Upper clamp 35		1			
029	413P01-9	Pipe holder 25		1			
030	266326-2	Binding head tapping screw 4X18		1			
031	347114-7	Lower clamp 35		1			
032	424942-8	Damper		1			
033	413P05-1	Spacer 25		1			
034	266326-2	Binding head tapping screw 4X18		6			
035	183X43-2	Grip set		1			
C10	931202-6	Hex. nut M5		1			
035		INC. 43					
036	141N51-9	Indication circuit complete E		1			
037	141N47-0	Switch circuit complete G		1			
C10	8064D9-0	Switch label		1			
038	413N93-6	Switch lever		1			
039	632U35-5	Switch unit		1			
040	233622-3	Torsion spring 12		1			
041	413P00-1	Lock off lever		1			
042	233101-1	Compression spring 4		1			

043	183X43-2	Grip set		1			
C10	931202-6	Hex. nut M5		1			
043		INC. 35					
044	651492-2	Switch C3JR-1A-PAXD3		1			
045	922244-1	Hex. socket head bolt M5X25 WG		1			
046	632U36-3	Switch unit		1			
047	922233-6	Hex. socket head bolt M5X20 WR		1			
048	413N94-4	Control lever		1			
049	413P03-5	Guard		1			
050	183X40-8	Housing set		1	*		
C10	263005-3	Rubber pin 6		2	*		
C20	8025F3-0	XGT logo label		1	*		
050		INC. 76			*		
050-1	183X40-8	Housing set	O	1			
C10	263005-3	Rubber pin 6		2			
C20	8025F3-0	XGT logo label		1			
050-1		INC. 76					
051	266420-0	Binding head tapping screw 5X20		4			
052	136862-1	Pipe bracket assembly		1			
C10	263002-9	Rubber pin 4		1			
053	266326-2	Binding head tapping screw 4X18		1			
054	413N95-2	Link		1			
055	213154-6	O-ring 14		1			
056	253798-0	Flat washer 13		1			
057	922211-6	Hex. socket head bolt M5X12 W		1			
058	922353-6	Hex. socket head bolt M6X30 WR		1			
059	8585W2-9	Name plate UR014G		1	*		
059-1	8504D6-8	UR014G NAME PLATE	<	1			
060	8585W9-5	Serial No. label UR014G		1			
061	210244-6	Ball bearing 6001ZZ		1			
063	210062-2	Ball bearing 607ZZ		1			
064	510551-0	Rotor assembly		1			
064		INC. 61,63					
065	266326-2	Binding head tapping screw 4X18		2			
066	413N96-0	Baffle plate		1			
067	629B96-0	Stator		1			
068	413N72-4	Motor housing		1			
069	632T07-4	Terminal unit		1			
070	620K90-9	Controller		1			
071	652031-1	Pan head screw M3X6		2			
072	266420-0	Binding head tapping screw 5X20		2			
073	422230-7	Cap		1			
074	327B36-9	Battery guard		1			
076	183X40-8	Housing set		1	*		
C10	263005-3	Rubber pin 6		2	*		
C20	8025F3-0	XGT logo label		1	*		
076		INC. 50			*		
076-1	183X40-8	Housing set	O	1			
C10	263005-3	Rubber pin 6		2			

C20	8025F3-0	XGT logo label		1			
076-1		INC. 50					
077	266326-2	Binding head tapping screw 4X18		7			
078	652069-6	Flat head screw M3X6		3			
079	632R96-7	Sensor unit		1			
080	652093-9	Pan head screw M2X5		3	*		
080-1	652119-7	Pan head screw M2X6	O	3			
081	327742-4	D ring 20		1			
082	347783-4	Ring support		1			
083	266388-0	Binding head tapping screw 5X16		2			
084	347B15-1	Cutter		1			
A01	127759-5	Band assembly L		1	*		
A01-1	122H18-0	Band assembly	O	1			
A02	782210-8	Box wrench		1			
A03	783202-0	Hex. wrench 4		1			
A04	783217-7	Hex. wrench 5		1			
A05	1911Y3-7	Trimmer head 121-SP set		1			
A08	831304-7	Accessory bag		1			
E01	807950-8	Sound 95dB label		1			
F01	1911Y3-7	Trimmer head 121-SP set		1			
F08	1917G3-7	Harness cover set		1			
F09	1917W2-1	NYLON CORD 2.4-15M SET		1			
F10	1917W3-9	NYLON CORD 2.4-30M SET		1			
F11	1917W4-7	NYLON CORD 2.4-225M SET		1			
F12	1917W5-5	NYLON CORD 2.7-15M SET		1			
F13	1917W6-3	NYLON CORD 2.7-30M SET		1			
F14	1917W7-1	NYLON CORD 2.7-180M SET		1			