Model No.UR008G Cordless Grass Trimmer

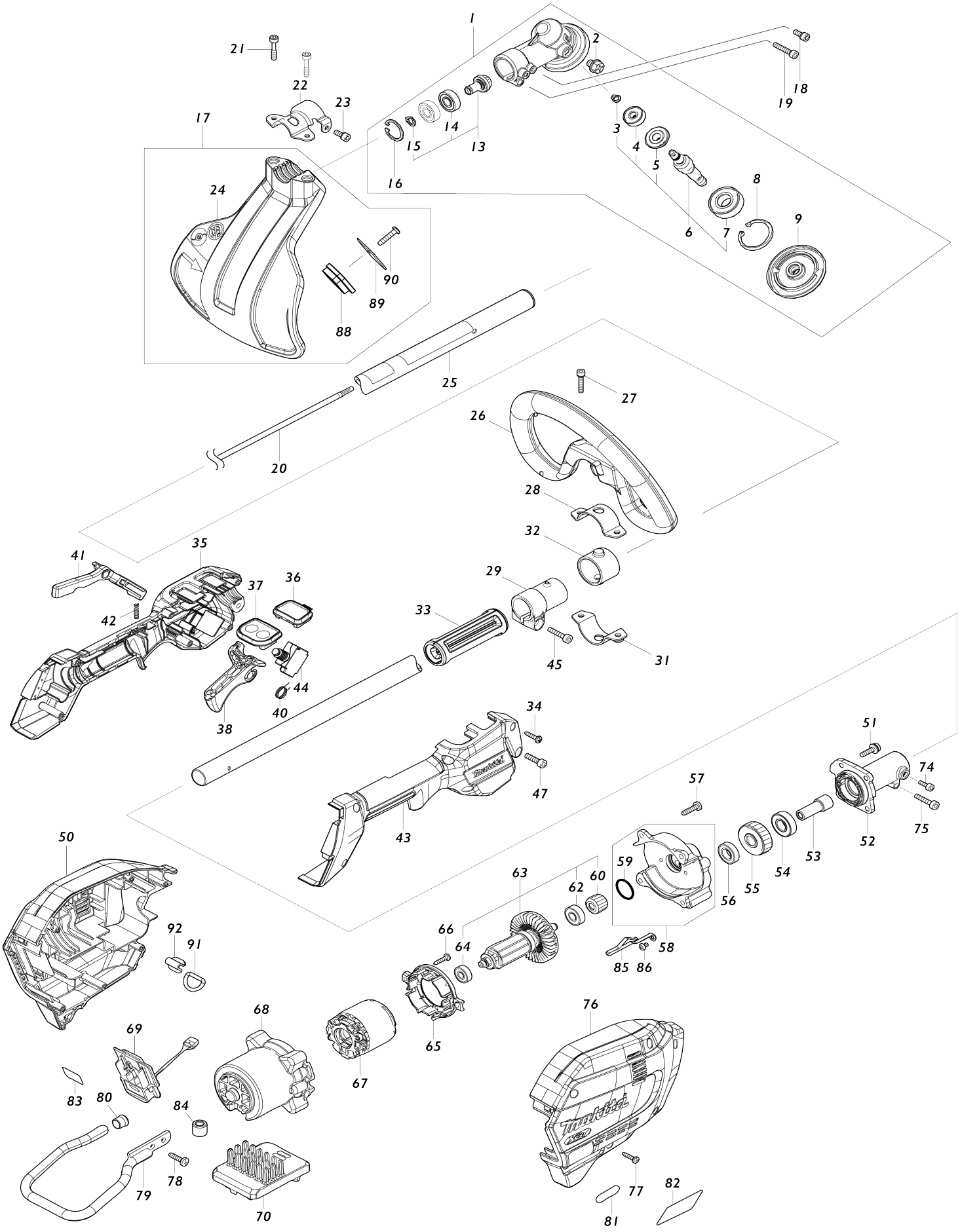

Model No.UR008G Cordless Grass Trimmer

Item No.	Parts No.	Description	Interchangeability	Q'ty	New/ Old	Note1	Note2
001	127380-0	Gear case assembly US		1			
001		INC. 2,6,8,9,13,16					
002	265590-2	Hex. head bolt M8X10 R		1			
003	259070-8	Retaining ring (EXT) S-7		1			
004	210030-5	Ball bearing 627ZZ		1			
005	226954-5	Spiral bevel gear 21		1			
006	136234-0	Cutter shaft assembly		1			
006		INC 3-5,7					
007	211228-7	Ball bearing 6202DDW		1			
008	259069-3	Retaining ring (INT) R-35		1			
009	140N88-3	Receive washer complete		1			
013	136236-6	Spiral bevel gear assembly		1			
013		INC. 14,15					
014	210049-4	Ball bearing 609ZZ		2			
015	259071-6	Retaining ring (EXT) S-9		1			
016	259072-4	Retaining ring (INT) R-24		1			
017	191B55-9	Protector N 430 set MG		1			
017		INC. 24,88-90					
018	922216-6	Hex. socket head bolt M5X14 W		1			
019	922242-5	Hex. socket head bolt M5X25		1	*		
019-1	922241-7	Hex. socket head bolt M5X25 W	O	1			
020	327056-1	Shaft		1			
021	251513-6	Hex. socket head bolt M5X25		2			
022	347107-4	Protector clamp 24		1			
023	922216-6	Hex. socket head bolt M5X14 W		1			
024	457273-0	Protector N 420-450		1			
025	140S83-3	Shaft pipe complete J		1	*		
C10	819312-8	Makita logo label		1	*		
C20	8008K7-9	Caution label		1	*		
025-1	1414V2-6	SHAFT PIPE COMPLETE J	<	1			
C10	819312-8	Makita logo label		1			
C20	8108E8-7	CAUTION LABEL		1			
026	457267-5	Loop handle		1			
C10	263005-3	Rubber pin 6		1			
027	922234-4	Hex. socket head bolt M5X20 WG		2			
028	347113-9	Upper clamp 35		1			
029	457269-1	Pipe holder 24		1			
031	347114-7	Lower clamp 35		1			
032	424942-8	Damper		1			
033	451601-1	Spacer 24		1			
034	266326-2	Binding head tapping screw 4X18		6			
035	183S36-9	Grip set		1			
035		INC. 43					
036	141D25-0	Indication circuit complete E		1			
037	140W06-5	Switch circuit complete G		1			
C10	819J26-9	Switch label		1			
038	459758-2	Switch lever		1			

040	233622-3	Torsion spring 12		1			
041	459759-0	Lock off lever		1			
042	233101-1	Compression spring 4		1			
043	183S36-9	Grip set		1			
043		INC. 35					
044	651492-2	Switch C3JR-1A-PAXD3		1			
045	922244-1	Hex. socket head bolt M5X25 WG		1			
047	922233-6	Hex. socket head bolt M5X20 WR		1			
050	183S87-2	Housing set		1	*		
C10	263005-3	Rubber pin 6		2	*		
050		INC. 76			*		
050-1	183R88-4	Housing set	<	1	*		
C10	263005-3	Rubber pin 6		2	*		
050-1		INC. 76			*		
050-1D	183R88-4	Housing set		1	*		
C10	263005-3	Rubber pin 6		2	*		
050-1D		INC. 76			*		
050-2	183R88-4	Housing set	O	1			
C10	263005-3	Rubber pin 6		2			
050-2		INC. 76					
051	911233-1	Pan head screw M5X20 WR		4			
052	140Y38-4	Pipe bracket complete		1			
C10	263002-9	Rubber pin 4		1			
053	325811-5	Spindle hub		1			
054	211131-2	Ball bearing 6001DDW		1			
055	227848-7	Helical gear 33		1			
056	211150-8	Ball bearing 6901ZZ		1			
057	266420-0	Binding head tapping screw 5X20		4			
058	136368-9	Gear box assembly		1			
058		INC. 59					
059	213961-7	O-ring 22		1			
060	227834-8	Helical gear 16		1			
062	210005-4	Ball bearing 608DDW		1			
063	519647-4	Rotor assembly		1			
063		INC. 60,62,64					
064	210062-2	Ball bearing 607ZZ		1			
065	459764-7	Baffle plate		1			
066	266326-2	Binding head tapping screw 4X18		2			
067	629A25-7	Stator		1	*		
067-1	629D21-3	Stator	S	1			
068	412961-6	Motor housing		1			
069	632P49-4	Terminal unit		1	*		
069-1	632W77-1	Terminal unit	<	1			
070	620F28-4	Controller		1	*		
070-1	620K59-3	Controller	S	1			
074	922211-6	Hex. socket head bolt M5X12 W		1	*		
074-1	922216-6	Hex. socket head bolt M5X14 W	O	1			
075	922233-6	Hex. socket head bolt M5X20 WR		1			

076	183S87-2	Housing set		1	*		
C10	263005-3	Rubber pin 6		2	*		
076		INC. 50			*		
076-1	183R88-4	Housing set	<	1	*		
C10	263005-3	Rubber pin 6		2	*		
076-1		INC. 50			*		
076-1D	183R88-4	Housing set		1	*		
C10	263005-3	Rubber pin 6		2	*		
076-1D		INC. 50			*		
076-2	183R88-4	Housing set	O	1			
C10	263005-3	Rubber pin 6		2			
076-2		INC. 50					
077	266326-2	Binding head tapping screw 4X18		6			
078	266420-0	Binding head tapping screw 5X20		2			
079	347752-5	Battery guard		1			
080	422230-7	Cap		1			
081	8025F3-0	XGT logo label		1			
082	811Y17-6	Name plate UR008G		1			
083	811Y21-5	Serial No. label UR008G		1			
084	688163-8	Line filter		1			
085	654886-0	Earth plate		1			
086	911102-6	Pan head screw M4X6		1			
088	459765-5	Cutter extension		1			
089	347115-5	Cutter		1			
090	266459-3	Binding head tapping screw 5X25		1			
091	327742-4	D ring 20		1			
092	347783-4	Ring support		1			
094	632G61-0	Switch unit	S	1			
100	620N49-4	Controller B	S	1			
101	638A31-1	Lead unit	S	1			
102	652119-7	Pan head screw M2X6	S	6			
A02	197993-1	Nylon cutting head assembly 95-M10L set		1	*		
C10	456640-6	Spool holder		1	*		
C20	232289-4	Compression spring 15		1	*		
C30	144259-0	Spool cover complete		1	*		
C40	456642-2	Spool		1	*		
A02-1	1915D7-6	Trimmer head assembly 98-M10L	O	1			
A03	783202-0	Hex. wrench 4		1			
A04	831304-7	Accessory bag		1			
A05	127759-5	Band assembly L		1	*		
A05-1	122H18-0	Band assembly	O	1			
A09B	412393-7	Battery cover		1	*		
A09-1D	412393-7	Battery cover		2			
A10	***DC40RA	DC40RA FAST CHARGER		1			
A10		COMPO-PARTS					
A11	191B36-3	Battery BL4025 set		2			

A12B	***ADP10	INTERCHANGEABLE ADAPTER		1			
A12B		COMPO-PARTS					
E01	807949-3	Sound 94dB label		1	*		
E01-1	807950-8	Sound 95dB label	<	1			
F01	191B55-9	Protector N 430 set MG		1			
F09	197472-9	Nylon cord 2.0-15M set		1			
F10	197473-7	Nylon cord 2.0-30M set		1			
F11	197474-5	Nylon cord 2.0-160M set		1			
F12	197475-3	Nylon cord 2.0-280M set		1			
F15	198266-5	Cutter assembly 110-M10L set M E		1			
F16	198383-1	Plastic blade 255 set ME		1			
F17	198426-9	Plastic blade 255 blade set ME		1			
F18	198501-1	Nylon cord 2.4-15M set		1	*		
F19	198502-9	Nylon cord 2.4-30M set		1			
F20	198503-7	Nylon cord 2.4-120M set		1			
F21	198504-5	Nylon cord 2.4-180M set		1			
F23	199450-5	Grease vessel set		1			
F25	199868-0	Plastic blade 305 set MG		1			
F26	199870-3	Plastic blade 305 set MG		1			
F45	1915D7-6	Trimmer head assembly 98-M10 L		1			
F46	1914R6-0	Trimmer head assembly 98-M10 L		1			
F47	1915D8-4	Trimmer head assembly 98-M10 L		1			
F48	1914R8-6	Trimmer head assembly 98-M10 L		1			
F49	1917G3-7	Harness cover set		1			