Model No.UH5570 HEDGE TRIMMER 550MM

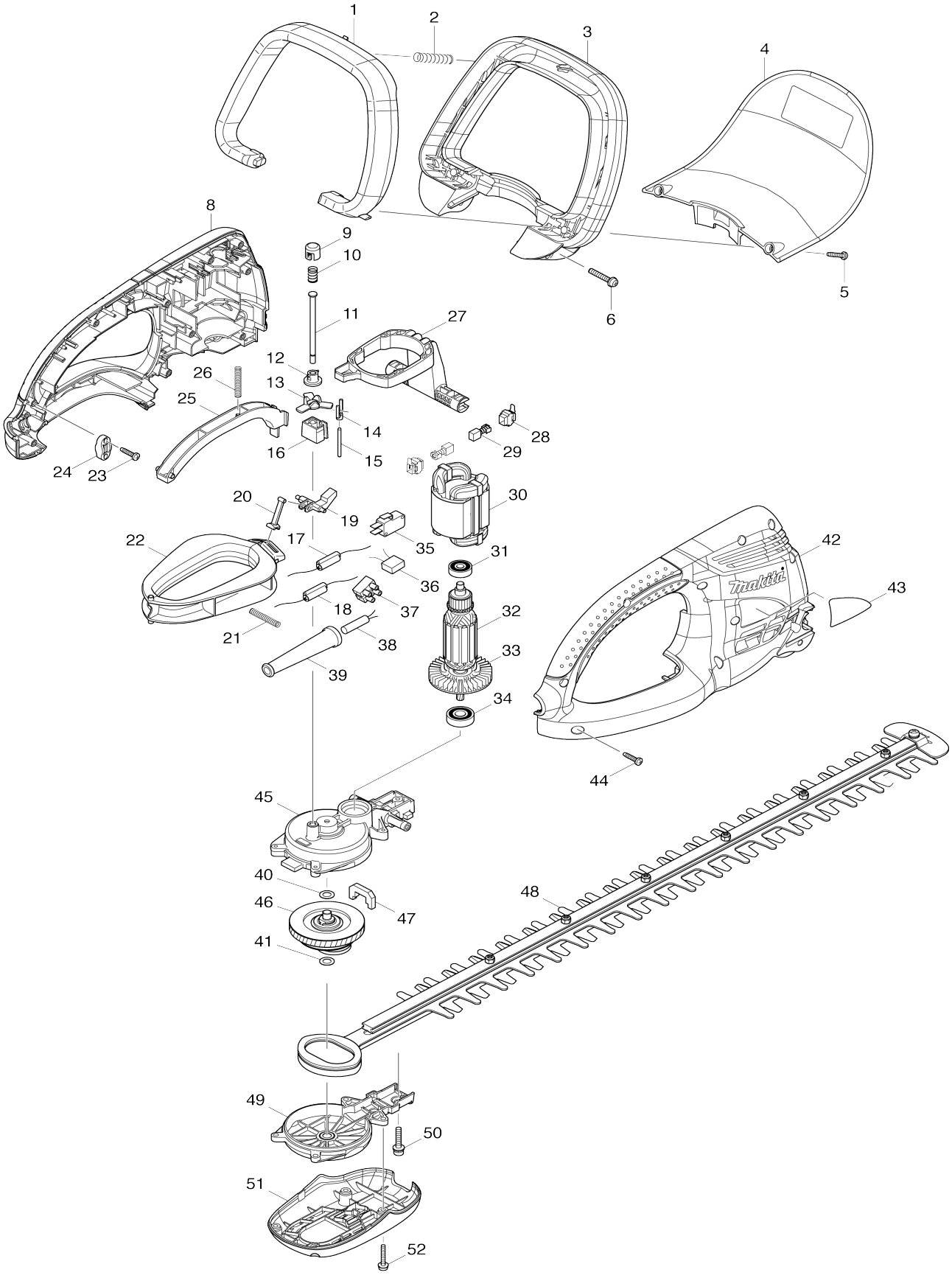

Model No.UH5570 HEDGE TRIMMER 550MM

Item No.	Parts No.	Description	Interchangeability	Q'ty	New/ Old	Note1	Note2
001	450444-8	Switch lever B		1			
002	233157-4	Compression spring 9		1			
003	450442-2	Front grip		1			
004	158629-7	Protector complete		1	*		
004-1	141J42-6	Protector complete	<	1	*		
004-2	1410D7-6	Protector complete	O	1			
C10	8074L2-3	Caution label		1			
005	265995-6	Binding head tapping screw 4X18		2			
006	911253-5	Pan head screw M5X30 WR		2			
008	188567-9	Housing set		1			
008		INC. 42					
009	417740-7	Insulation cap		1			
010	233288-9	Compression spring 8		1			
011	268077-3	Flat fillister HD. pin 5		1			
012	417727-9	Cap holder		1			
013	417736-8	Lifter		1			
014	417735-0	Pusher cap		1			
015	268237-7	Rod 3		1			
016	417781-3	Pin holder		1			
017	646206-2	Choke coil		1	*		
017-1	646049-2	Choke coil	<	1			
018	646207-0	Choke coil		1	*		
018-1	646052-3	Choke coil	<	1			
019	417737-6	Link		1			
020	417739-2	Rod		1			
021	233156-6	Compression spring 5		1			
022	417731-8	Switch lever C		1			
023	265995-6	Binding head tapping screw 4X18		2			
024	687063-9	Strain relief		1			
025	450443-0	Switch lever A		1			
026	233156-6	Compression spring 5		1			
027	450488-8	Lever		1			
028	643936-6	Brush holder		2			
029	191962-4	Carbon brush set CB-419		1	*		
029-1	195015-1	Carbon brush set CB-419	O	1			
030	621733-0	Field 220-240V		1			
031	211027-7	Ball bearing 627ZZ		1			
032	515738-9	Armature assembly 220-240V		1			
032		INC. 31,33,34					
033	241850-6	Fan 60		1			
034	211062-5	Ball bearing 6000ZZ		1			
035	650608-6	Switch D3B6-V1AA		1	*		
035-1	650628-0	Switch 1005.1004	<	1			
036	645190-8	Noise suppressor		1	*		
036-1	645089-7	Noise suppressor	<	1			
037	654531-7	Terminal block		1			

038	666246-4	Power supply cord 1.5-2-0.3		1			
039	682503-2	Cord guard 8		1			
040	253215-0	Flat washer 8		1			
041	253215-0	Flat washer 8		1			
042	188567-9	Housing set		1			
042		INC. 8					
043	865765-9	Name plate UH5570		1			
044	265995-6	Binding head tapping screw 4X18		10			
045	158625-5	Gear housing complete		1			
046	158623-9	Gear complete		1			
047	443142-1	Dust guard		1			
048	194663-3	Shear blade assembly set		1			
C10	264013-7	Hex. lock nut M5-8		5			
C20	345205-8	Brunch catcher		1			
C30	911208-0	Pan head screw M5X10 WR		1	*		
C31	911208-0	Pan head screw M5X10 WR	<	1			
C40	257766-5	Sleeve 5		7			
C50	265181-9	Truss head screw M5X20		5			
C60	188605-7	Oil vessel set		1			
049	158626-3	Gear housing cover complete		1			
050	265182-7	Pan head screw M5X25		2			
051	450440-6	Under cover		1			
052	911148-2	Pan head screw M4X25 WR		4			
A01	194677-2	Cord holder complete set		1	*		
A01-1	194677-2	Cord holder complete set	O	1			
A02	158024-1	Hook complete		1			
A03	450489-6	Blade cover		1			
E01	688162-0	Line filter		1			
F02	194663-3	Shear blade assembly set		1			
F04	194677-2	Cord holder complete set		1			
F05	194679-8	Arm band complete set		1	*		
F05-1	194679-8	Arm band complete set	O	1			
F06	194681-1	Chip receiver assembly set		1			