Model No.SG1251 Wall Chaser

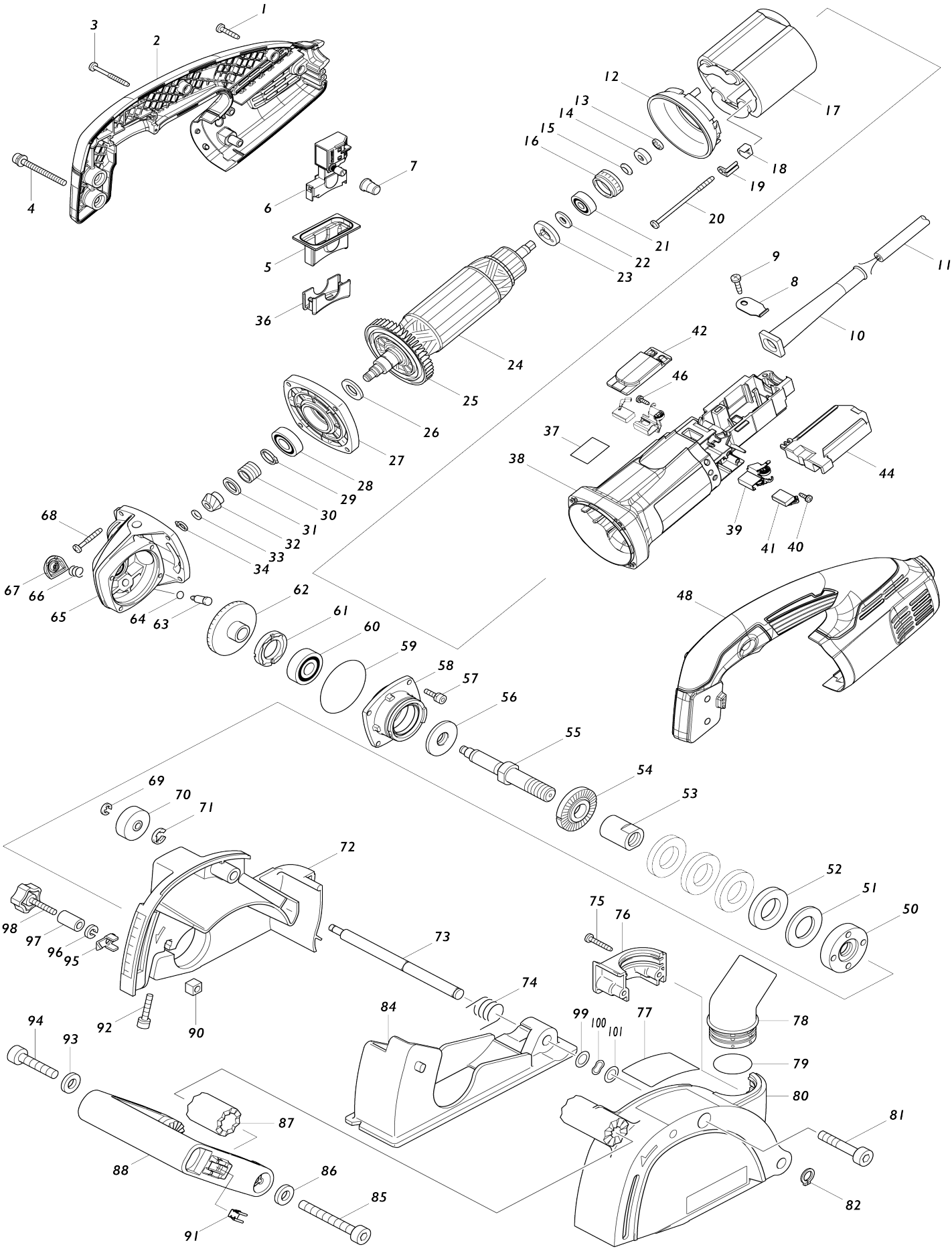

Model No.SG1251 Wall Chaser

Item No.	Parts No.	Description	Interchangeability	Q'ty	New/ Old	Note1	Note2
001	265995-6	Binding head tapping screw 4X18		3			
002	187942-6	Handle set		1			
002		INC. 48					
003	266048-4	Binding head tapping screw 4X40		3	*		
003-1	266560-4	Binding head tapping screw 4X40	O	3			
004	911263-2	Pan head screw M5X40 WR		2			
005	424457-5	Dust cover		1			
006	650113-3	Switch SGEL115CDY-15		1	*		
006-1	650114-1	Switch SGES115C-8	<	1			
007	421459-2	Dust cover		1			
008	687169-3	Strain relief		1			
009	266192-7	Binding head tapping screw 4X14		1			
010	682573-1	Cord guard 10		1			
011	665883-1	Power supply cord 1.0-2-5.0		1			
012	413076-2	Baffle plate		1			
013	259039-2	Self lock 6		1			
014	688117-5	Magnet sleeve		1			
015	267756-0	Wave washer 6		1			
016	421738-8	Labyrinth rubber ring 22		1	*		
016-1	422750-1	Labyrinth rubber ring 22	<	1			
017	626678-7	Field 220-240V		1	*		
017-1	621C68-7	Field	S	1			
018	417237-6	Insulation cover		2	*		
019	344871-8	Retainer		2			
020	266258-3	Binding head tapping screw 4X70		2			
021	210027-4	Ball bearing 627DDW		1			
022	253823-7	Flat washer 7		1			
023	681656-4	Insulation washer		1	*		
023-1	681656-4	Insulation washer	O	1			
024	515208-8	Armature assembly 220-240V		1			
024		INC. 21-23,25					
025	240033-5	Fan 57		1			
026	253084-9	Flat washer 12		1			
027	317359-1	Gear housing cover		1			
028	210105-0	Ball bearing 6001LLU		1			
029	961052-5	Retaining ring (EXT) S-12		1			
030	233901-9	Lock spring 12		1			
031	253052-2	Flat washer 12		1			
032	227429-7	Spiral bevel gear 9		1	*		
032-1	227A58-2	Spiral bevel gear 9	S	1			
033	253077-6	Flat washer 6		1			
034	961002-0	Retaining ring (EXT) S-6		1			
036	452942-8	Switch cover		1			
037	804W32-5	SJS mark label		1	*		

038	455385-3	Motor housing		1			
039	643760-7	Brush holder		2			
040	266256-7	Binding head tapping screw 3X10		2			
041	191978-9	Carbon brush set CB-318		1			
042	455386-1	Motor housing cover		1			
044	620336-7	Controller		1			
046	266256-7	Binding head tapping screw 3X10		2			
048	187942-6	Handle set		1			
048		INC. 2					
050	224577-3	Lock nut 14-45		1			
051	331661-8	Spacer 3		1			
052	331662-6	Spacer 6		4			
053	257732-2	Sleeve 14		1			
054	224415-9	Inner flange 42		1			
055	324393-4	Spindle		1			
056	415300-9	Labyrinth ring		1			
057	265490-6	Hex. socket head bolt M4X16		4			
058	318302-3	Bearing box		1			
059	213673-2	O-ring 52		1			
060	211129-9	Ball bearing 6201DDW		1			
061	285841-7	Bearing retainer 19-33		1			
062	227430-2	Spiral bevel gear 35		1	*		
062-1	227A59-0	Spiral bevel gear 35	S	1			
063	256459-1	Shoulder pin 7		1			
064	213048-5	O-ring 6		1			
065	153488-4	Gear housing complete		1			
066	233072-2	Compression spring 8		1			
067	418067-8	Pin cap		1			
068	266257-5	Binding head tapping screw 4X28		4			
069	961011-9	Stop ring (EXT) E-4		1			
070	257227-5	Ring 6		1			
071	961014-3	Stop ring (EXT) E-8		1			
072	153685-2	Blade case complete		1			
073	324392-6	Shoulder shaft		1			
074	231655-2	Torsion spring 11		1			
075	266040-0	Binding head tapping screw 4X25		2			
076	418390-1	Dust cover		1			
077	850F04-6	Name plate SG1251		1			
078	416741-2	Elbow		1			
079	213423-5	O-ring 30		1			
080	317725-2	Cover		1			
081	922466-3	Hex. socket head bolt M8X45 W		1			
082	961006-2	Retaining ring (EXT) S-10		1			
084	317723-6	Base		1			
085	922487-5	Hex. socket head bolt M8X65		1			
086	941201-0	Flat washer 8		1			
087	223145-9	Cam		1			
088	417665-5	Front grip		1			
090	252185-0	Square nut M6		1			

091	344391-2	Bit holder		1			
092	922251-4	Hex. socket head bolt M5X30 W		1			
093	941201-0	Flat washer 8		1			
094	922462-1	Hex. socket head bolt M8X40		1			
095	345364-8	Indicator		1			
096	942151-2	Spring washer 6		1	*		
096-1	253428-3	Spring washer 6	O	1			
097	257731-4	Sleeve 7		1			
098	251897-2	Thumb screw M6X33		1	*		
098-1	265F43-7	THUMB SCREW M6X33	O	1			
099	253310-6	Thin washer 10		1			
100	267783-7	Wave washer 10		1			
101	253310-6	Thin washer 10		1			
A01	A-80438	D.WHEEL 125X22.23		2			
A02	782407-9	Lock nut wrench 35		1	*		
A02-1	782034-2	Lock nut wrench 35	O	1			
A03	783204-6	Hex. wrench 6		1			
A04	821552-6	Connector plastic case (type 4)		1			
C10	453974-8	Latch		4			
A05	838111-9	Inner tray		1			
A06	804Y88-0	Indication label SG1251J		1			
A07	804Y89-8	Plastic case label SG1251J		2			
E01	654532-5	Terminal block 1P		1			
E02	645089-7	Noise suppressor		1			

Please state Parts No. when your order.

Print Date 06/15/2026