Model No.PF0800 SUBMERSIBLE PUMP

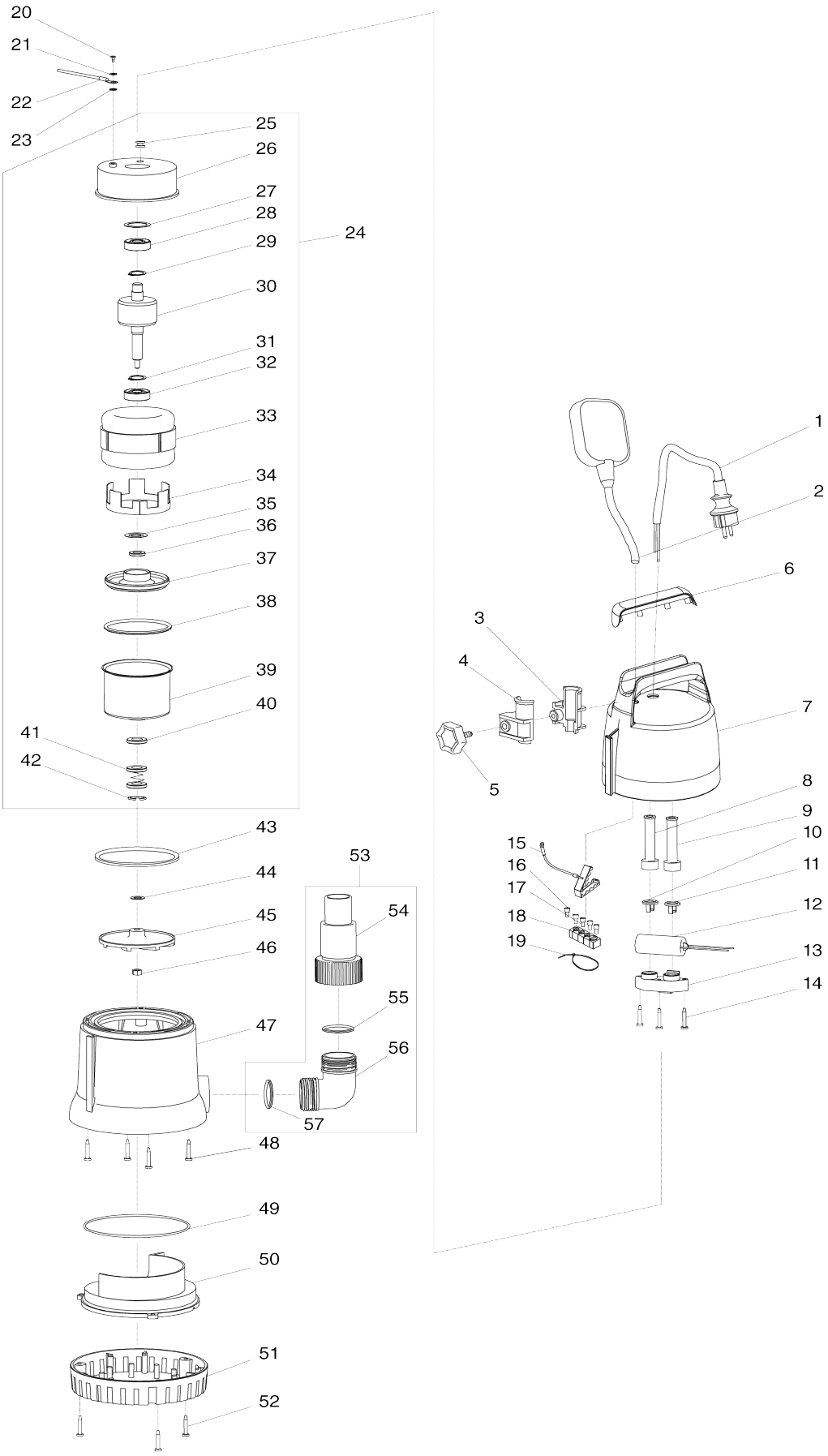

Model No.PF0800 SUBMERSIBLE PUMP

Item No.	Parts No.	Description	Interchangeability	Q'ty	New/ Old	Note1	Note2
001	609025435	POWER SUPPLY CORD 1.0-3-10		1	*		
001-1	JH00000123	CORD H07RN-F 1.0-3-10 EU	<	1			
002	609024581	FLOAT SWITCH		1	*		
002-1	609026209	FLOAT SWITCH BLUE		1	*		
002-2	JH00000126	FLOAT SWITCH BLUE	<	1			
003	609024582	WIRE CLAMP		1	*		
003-1	609026210	CORD CLAMP BODY SIDE		1	*		
003-2	JH00000078	CORD CLAMP BODY SIDE	O	1			
004	609024583	WIRE CLAMP		1	*		
004-1	609026211	CORD CLAMP THUMB SCREW SIDE		1	*		
004-2	JH00000079	CORD CLAMP THUMB SCREW SIDE	O	1			
005	609024584	SELF-TAPPING SCREW		1	*		
005-1	609026212	THUMB SCREW M5X16		1			
006	609024586	HANDLE COVER MAKITA		1	*		
007	609024794	BACK PUMP CASING		1	*		
007-1	609026219	UPPER HOUSING BLUE		1	*		
007-2	JH00000040	UPPER HOUSING BLUE	<	1	*		
007-3	JH00000199	UPPER HOUSING BLUE	<	1			
008	609024588	CORD GUARD 8.5		1	*		
008-1	JH00000110	CORD GUARD 8.5	<	1			
009	609024588	CORD GUARD 8.5		1	*		
009-1	JH00000110	CORD GUARD 8.5	<	1			
010	609024590	CORD CLAMP 8.5		1			
011	609024590	CORD CLAMP 8.5		1			
012	609024591	CAPACITOR 6 MICRO F		1	*		
012-1	609024838	CAPACITOR 16 MICRO F		1	*		
012-2	JH00000045	CAPACITOR 16 MICRO F		1	*		
012-3	JH00000182	CAPACITOR 16 MICRO F	O	1			
013	609024592	CAPACITOR HOLDER		1			
014	609024593	TAPPING SCREW 4X32		3			
015	609024628	GROUND COVER FOR RUBBER COVER		1			
016	609024629	CLOSED END SPLICE 5.5-SD		2			
017	609024630	CLOSED END SPLICE 2-SD		3			
018	609024631	RUBBER COVER FOR 4 SPLICE		1	*		
018-1	JH00000116	RUBBER COVER FOR 4 SPLICE	<	1			
019	609024632	CABLE TIE		1			
020	609024601	SCREW M4X8		1			
021	609024596	SPRING WASHER 4		1			
022	JH00000004	GROUND WIRE ASSY		2	*		
022-1	JH00000004	GROUND WIRE ASSY	O	1			
023	609024600	TOOTHED LOCK SPRING WASHER 4		1	*		
023-1	JH00000082	TOOTHED LOCK SPRING WASHER 4	<	1			
024	609024807	MOTOR ASSY 230V 50HZ		1	*		
D10		INC. 25-42					

024-1	JH00000065	MOTOR ASSY 230V 50HZ		1			
D10		INC. 25-42					
D11		INC. 25-28,30,32-42					
025	609024595	GROMMET 10		1			
026	609024594	MOTOR HOUSING UPPER SIDE		1			
027	609024602	WAVE WASHER 25		1			
028	609024603	BALL BEARING 6201Z		1			
029	961052-5	RETAINING RING (EXT) S-12		1	*		
030	609024622	CASING		1	*		
030-1	JH00000048	ROTOR		1			
031	961052-5	RETAINING RING (EXT) S-12		1	*		
032	609024603	BALL BEARING 6201Z		1			
033	609024678	STATOR ASSY 220V 60HZ		2	*		
033-1	JH00000049	STATOR ASSY 230V 50HZ		2	*		
033-2	JH00000049	STATOR ASSY 230V 50HZ	O	1			
034	609024679	LINING RING		1	*		
034-1	609024667	LINING RING	X	1			
035	609024607	SHIM		1			
036	609024608	SKELETON SEAL RING		1	*		
036-1	JH00000111	SKELETON SEAL RING	<	1			
037	609024609	BEARING BOX		4	*		
037-1	609024609	BEARING BOX	O	1			
038	609024610	O-RING		1	*		
038-1	JH00000112	O-RING	<	1			
039	609024680	MOTOR HOUSING LOWER SIDE		1			
040	609024608	SKELETON SEAL RING		1	*		
040-1	JH00000111	SKELETON SEAL RING	<	1			
041	609024633	MECHANICAL SEAL		1	*		
041-1	JH00000127	MECHANICAL SEAL	<	1			
042	609024634	RETAINING RING S-12 INOX		1			
043	609024612	O-RING		1	*		
043-1	JH00000113	O-RING	<	1			
044	609024613	SPACER WASHER 12		1			
045	609024681	IMPELLER		1	*		
045-1	JH00000050	IMPELLER		1			
046	609024615	NYLON INSERT HEX LOCK NUT M 8		1			
047	609024682	MAIN PUMP SHELL		1			
C10	216013-3	STEEL BALL 6		1			
048	609024620	Y-HEAD TAPPING SCREW 4X28 IN OX		4			
049	609024621	O-RING		2	*		
049-1	JH00000114	O-RING	<	1			
050	609024622	CASING		1			
051	609024623	STRAINER		1			
052	609024624	TAPPING SCREW 4x24 INOX		3			
053	JH00000005	OUTLET CONNECTOR KIT		1			
D10		INC. 54-57					
054	609024627	OUTLET CONNECTOR		1			
055	609024625	O-RING		1	*		
055-1	JH00000115	O-RING	<	1			
056	609024626	ELBOW		1			

057	609024625	O-RING		1	*		
057-1	JH00000115	O-RING	<	1			

Please state Parts No. when your order.

Print Date 06/11/2024