Model No.LS0815FL Slide Compound Miter Saw

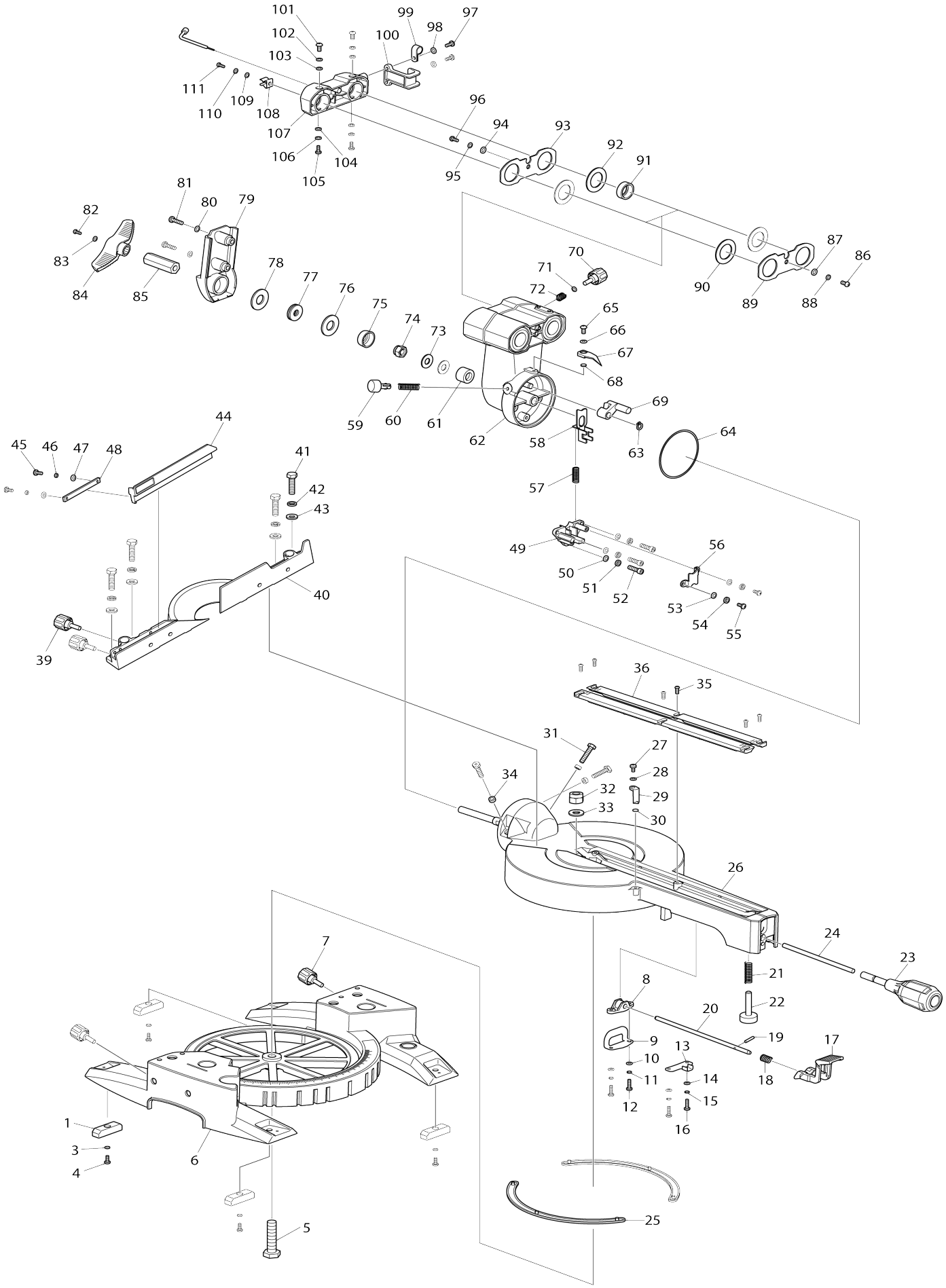

Model No.LS0815FL Slide Compound Miter Saw

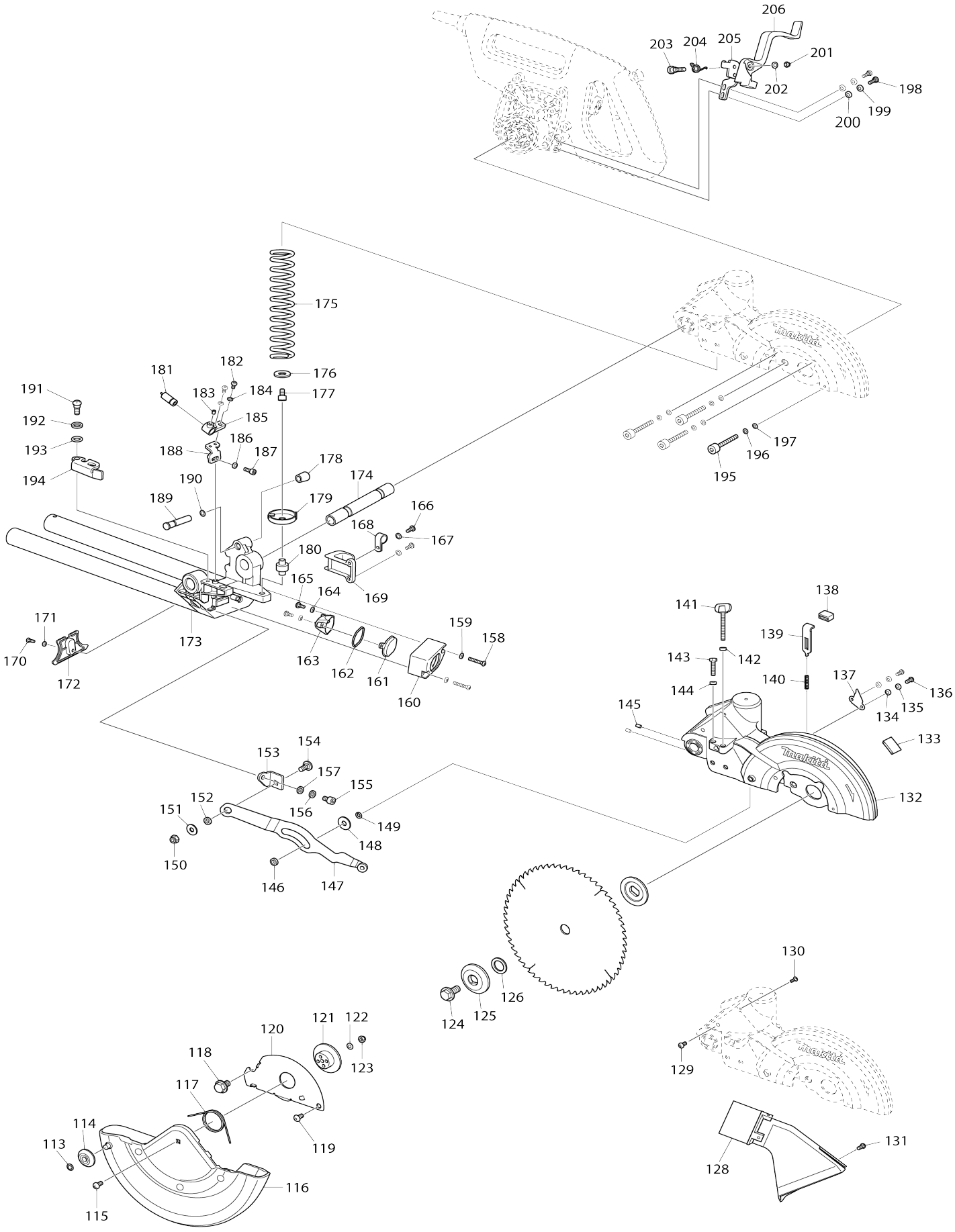

Model No.LS0815FL Slide Compound Miter Saw

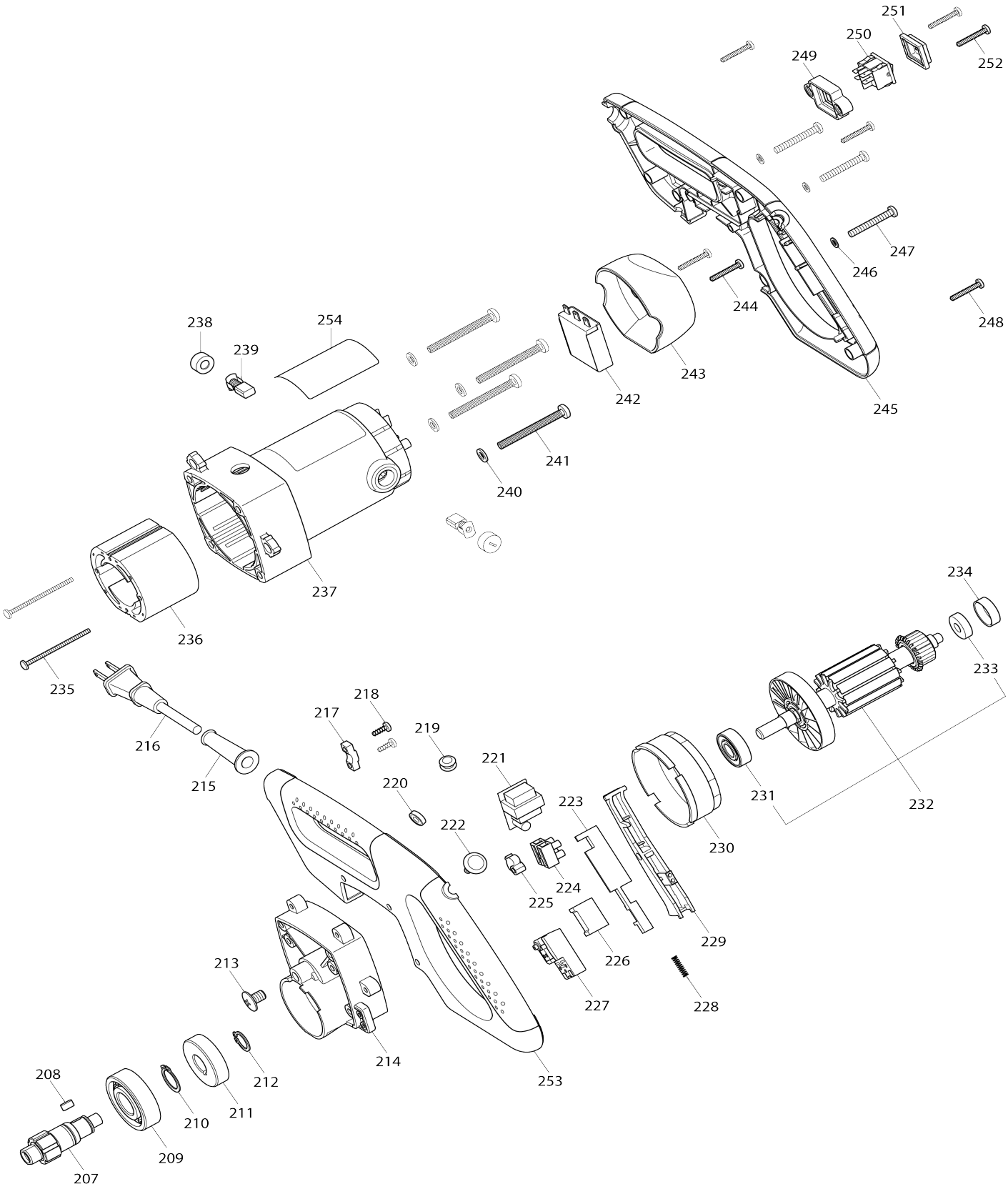

Model No.LS0815FL Slide Compound Miter Saw

Item No.	Parts No.	Description	Interchangeability	Q'ty	New/ Old	Note1	Note2
001	JM23500132	BUFFER PAD		4			
002	JM23000127	HOLDER		2			
003	JM23100016	FLAT WASHER 4		4			
004	JM23500008	CROSS HEAD SCREW M4X10		4			
005	JM23500009	PIVOT SHAFT		1			
006	JM23510001	BASE COMPLETE		1			
C10	JM23500010	MITER SCALE LABEL		1	*		
C20	JM2708A060	CAUTION LABEL		2	*		
C30	JM23500011	BASE		1	*		
C40	JM2318A058	CAUTION LABEL		1	*		
007	JM23100013	KNOB FOR EXT.WING		2	*		
007-1	JM00000074	PAN HEAD SCREW M6X20	X	2			
008	JM23100025	WORKING TABLE LOCKING BRACKET		1			
009	JM23100020	LOCK PLATE B		1			
010	JM23100016	FLAT WASHER 4		2			
011	JM23100015	SPRING WASHER 4		2			
012	JM23100014	CROSS HEAD SCREW M4X15		2	*		
012-1	JM23100033	PAN HEAD SCREW M4X12	<	2			
013	JM23100018	LOCK PLATE A		1			
014	JM23100016	FLAT WASHER 4		2			
015	JM23100015	SPRING WASHER 4		2			
016	JM23100014	CROSS HEAD SCREW M4X15		2	*		
016-1	JM23100033	PAN HEAD SCREW M4X12	<	2			
017	JM23100023	PRESS PLATE		1			
018	JM23100021	LOCK SPRING		1			
019	JM23100022	LOCK PIN		1			
020	JM23500015	LOCK SHAFT B		1			
021	JM23500014	SPRING11		1			
022	JM23500013	ADJUSTABLE ROD		1			
023	JM23100027	MITER LOCKING HANDLE		1			
024	JM23500016	LOCK SHAFT A		1			
025	JM23500012	FRICTION PLATE		2			
026	JM23510002	WORKING TABLE COMPLETE		1			
C10	JM23500017	BEVEL SCALE LABEL		1	*		
C20	JM23500018	LOCKING ROD		1	*		
C30	JM23500019	WORKING TABLE		1	*		
C40	JM23500020	ELASTIC PIN 4X30		1			
C50	JM23500021	HEX NUT M10		1			
027	JM23500008	CROSS HEAD SCREW M4X10		1	*		
027-1	JM23100033	PAN HEAD SCREW M4X12	X	1			
028	JM23100016	FLAT WASHER 4		1			
029	JM23100030	MITER POINTER		1			
030	JM23500053	EXTERNAL TOOTHED LOCK WASHER 4		1			
031	JM23100034	HEX BOLT M6X28		3	*		
031-1	JM23100034	HEX BOLT M6X28	O	1			
032	JM23500023	LOCKNUT M8		1			

033	JM23500022	FLAT WASHER 8		1			
034	JM23100035	ANTI-LOOSEN RING		3	*		
034-1	JM23100035	ANTI-LOOSEN RING	O	1			
035	JM23500008	CROSS HEAD SCREW M4X10		6	*		
035-1	JM23100033	PAN HEAD SCREW M4X12	X	6			
036	JM23100029	TABLE INSERT		2	*		
036-1	JM00000430	KERF BOARD	O	2			
039	JM23100013	KNOB FOR EXT.WING		2			
040	JM23500026	RIP FENCE		1	*		
040-1	JM00000081	RIP FENCE	X	1			
041	JM23100062	HEX BOLT M8X30		4			
042	JM23100061	SPRING WASHER 8		4			
043	JM23100060	FLAT WASHER 8		4			
044	JM23510013	SUB FENCE COMPLETE		1	*		
C10	JM23500127	SUB FENCE		1	*		
C20	JM23580063	CAUTION LABEL		1	*		
044-1	JM00000080	SUB FENCE COMPLETE	X	1			
C10	JM23500127	SUB FENCE		1	*		
C20	JM23580063	CAUTION LABEL		1	*		
045	JM23100065	PAN HEAD SCREW M4X8		2			
046	JM23100015	SPRING WASHER 4		2			
047	JM23100016	FLAT WASHER 4		2			
048	JM23500024	KEY		1			
049	JM23500095	45DEGREE LIMIT BRACKET		1			
050	JM23100007	FLAT WASHER 5		3			
051	JM23100149	SPRING WASHER 5		3			
052	JM23500096	H.S.BOLT M5X14		3			
053	JM23100016	FLAT WASHER 4		2			
054	JM23100015	SPRING WASHER 4		2			
055	JM23500008	CROSS HEAD SCREW M4X10		2			
056	JM23500097	45DEGREE COVER		1			
057	JM23500094	SPRING8		1			
058	JM23500093	45DEGREE LIMIT PLATE		1			
059	JM23100051	LIMITED KNOB		1			
060	JM23100049	MITER PRESSION SPRING		1			
061	JM23100052	CLAMP PLATE		1			
062	JM23510008	SUPPORT ARM COMPLTE		1			
C10	JM23100087	HEX SOCKET SET SCREW M6X8		2	*		
C20	JM23500089	LINEAR BEARING		3	*		
C30	JM23100081	BUFFER A		2	*		
C40	JM23500090	SUPPORT ARM		1	*		
C50	JM23500091	ANGLE LIMIT		1	*		
C60	JM23500092	BEARING GASKET		1	*		
062		INC. 261-266					
063	JM23500079	RETAINING RING 8		1			
064	JM23500078	FRICTION RING		1			
065	JM23100014	CROSS HEAD SCREW M4X15		1	*		
065-1	JM23100033	PAN HEAD SCREW M4X12	<	1			
066	JM23100016	FLAT WASHER 4		1			
067	JM23100048	BEVEL POINTER		1			
068	JM23500053	EXTERNAL TOOTHED LOCK WASHER 4		1			

069	JM23500080	90DEGREE LIMIT BRACKET		1			
070	JM23100086	SLIDING BAR LOCKING KNOB		1			
071	JM23100190	SPECIAL WASHER 6		1			
072	JM23100088	PRESSURE SPRING		1			
073	JM23100010	FLAT WASHER 10		2			
074	JM23100009	HEX LOCK NUT M10		1			
075	JM23100053	BOWL TYPE PLATE		1			
076	JM23100055	BIG FLAT WASHER 10X26X2.5		1			
077	JM23100054	SURFACE BEARING		1			
078	JM23100055	BIG FLAT WASHER 10X26X2.5		1			
079	JM23500086	SUPPORT ARM COVER		1			
080	JM23100007	FLAT WASHER 5		2			
081	JM23100006	CROSS HEAD SCREW M5X20		2			
082	JM23100019	CROSS HEAD SCREW M4X18		1			
083	JM23100016	FLAT WASHER 4		1			
084	JM23500087	BEVEL LOCKING HANDLE		1			
085	JM23500088	HEX NUT		1			
086	JM23500081	CROSS HEAD SCREW M5X		1			
087	JM23100007	FLAT WASHER 5		1			
088	JM23100149	SPRING WASHER 5		1			
089	JM23500082	SUPPORT ARM COVER		1			
090	JM23500083	DUSTPROOF RING		2			
091	JM23500084	BEARING GASKET		1	*		
092	JM23500083	DUSTPROOF RING		2			
093	JM23500082	SUPPORT ARM COVER		1			
094	JM23100007	FLAT WASHER 5		1			
095	JM23100149	SPRING WASHER 5		1			
096	JM23500081	CROSS HEAD SCREW M5X		1			
097	JM23100019	CROSS HEAD SCREW M4X18		2	*		
097-1	JM23100019	CROSS HEAD SCREW M4X18	O	1			
098	JM23100016	FLAT WASHER 4		2	*		
098-1	JM23100016	FLAT WASHER 4	O	1			
099	JM23100072	CORD CLAMP		1			
100	JM23500066	CABLE HOLDER BRACKET		1			
101	JM23500081	CROSS HEAD SCREW M5X		2			
102	JM23100149	SPRING WASHER 5		2			
103	JM23100007	FLAT WASHER 5		2			
104	JM23100007	FLAT WASHER 5		2			
105	JM23500081	CROSS HEAD SCREW M5X		2			
106	JM23100149	SPRING WASHER 5		2			
107	JM23500085	SLIDING BAR BRACKET		1			
108	JM23100091	WRENCH CLIP		1			
109	JM23100016	FLAT WASHER 4		1			
110	JM23100015	SPRING WASHER 4		1			
111	JM23100014	CROSS HEAD SCREW M4X15		1	*		
111-1	JM23100033	PAN HEAD SCREW M4X12	<	1			
113	JM23100103	WHEEL LOCK RING		1			
114	JM23100102	GUARD WHEEL		1			
115	JM23500031	SQUARE NECK BOLT M5X12		1			
116	JM23510004	LOW BLADE GUARD		1	*		
C10	JM23500032	LOW BLADE GUARD		1	*		
C20	JM23500033	LOW GUARD SUPPORT PLATE		1	*		

C30	JM23100104	FLAT WASHER 5		3	*		
C40	JM23100101	GUARD RIVET		3	*		
116-1	JM23510024	LOW BLADE GUARD	<	1			
117	JM23500035	GUARD SPRING		1			
118	JM23500134	HEX BOLT M8X15		1			
119	JM23100113	CROSSHEAD SCREW FOR GUARD		1			
120	JM23500036	LOW GUARD FIX PLATE		1			
121	JM23500037	GUARD LINKAGE CENTER PLATE		1			
122	JM23100007	FLAT WASHER 5		1			
123	JM23100141	HEX LOCK NUT 5		1			
124	JM23500135	BLADE BOLT		1			
125	JM23500038	BLADE FLANGE		2	*		
125-1	JM23500038	BLADE FLANGE	O	1			
126	JM23100144	RING 30		1	*		
128	JM23500039	DUST PORT		1			
129	JM23100193	PIN C		1	*		
129-1	JM23500040	CROSS HEAD SCREW ST4.2X12	X	1			
130	JM23100193	PIN C		1	*		
130-1	JM23500040	CROSS HEAD SCREW ST4.2X12	X	1			
131	JM23500034	CROSS HEAD SCREW		1			
132	JM23510005	UP BLADE GUARD COMPLETE		1			
C10	JM23500046	UP BLADE GUARD		1	*		
C20	JM23100114	LINK PIN		1	*		
C30	JM23100147	BUFFER		1	*		
132		INC. 271-273					
133	JM23500047	GUARD INSERT		1			
134	JM23100016	FLAT WASHER 4		2			
135	JM23100015	SPRING WASHER 4		2			
136	JM23100014	CROSS HEAD SCREW M4X15		2	*		
136-1	JM23100033	PAN HEAD SCREW M4X12	<	2			
137	JM23500048	LOCK PLATE		1			
138	JM23100138	LOCK COVER		1			
139	JM23500050	LOCK PLATE		1	*		
139-1	JM23500139	LOCK PLATE	<	1			
140	JM23500049	LOCK SPRING5		1			
141	JM23100119	LIMITED KNOB		1			
142	JM23100035	ANTI-LOOSEN RING		1			
143	JM23500051	HEX BOLT M6X25		1			
144	JM23100035	ANTI-LOOSEN RING		1			
145	JM23500052	H.S.SET SCREW		2			
146	JM23100098	LINK SLEEVE		1			
147	JM23510003	LINK COMPLETE		1			
C10	JM23500028	LINK		1			
C20	JM23500029	LINK PIN		1			
C30	JM23500030	BEARING 695Z		1			
148	JM23100071	THIN FLAT WASHER 6		1			
149	JM23100115	RETAINING RING 5		1			
150	JM23500027	LOCK THIN NUT		1			
151	JM23100071	THIN FLAT WASHER 6		1			
152	JM23100098	LINK SLEEVE		1			
153	JM23500055	LINK FIX PLATE		1			

154	JM23500054	SQUARE NECK BOLT M6X14		1			
155	JM23500071	H.S.BOLT M6X12		1			
156	JM23100151	SPRING WASHER 6		1			
157	JM23100190	SPECIAL WASHER 6		1			
158	JM23500056	CROSS HEAD SCREW M4X28		2			
159	JM23100016	FLAT WASHER 4		2			
160	JM23500057	LAMP COVER		1			
161	JM23500058	LAMP LENZ		1			
162	JM23500059	SEALING RING		1			
163	JM23510006	LAMP ASSY		1			
C10	JM23500060	REFLECTOR		1			
C20	JM23500061	LIGHT		1			
164	JM23500128	FLAT WASHER 3		2			
165	JM23500062	S.T.CROSS HEAD SCREW 9X13		2			
166	JM23100019	CROSS HEAD SCREW M4X18		2	*		
166-1	JM23100019	CROSS HEAD SCREW M4X18	O	1			
167	JM23100016	FLAT WASHER 4		2	*		
167-1	JM23100016	FLAT WASHER 4	O	1			
168	JM23100072	CORD CLAMP		1			
169	JM23500066	CABLE HOLDER BRACKET		1			
170	JM23500008	CROSS HEAD SCREW M4X10		1			
171	JM23100016	FLAT WASHER 4		1			
172	JM23500077	BRACKET BACK COVER		1			
173	JM23510007	UP BLADE GUARD BRACKET COMP		1			
C10	JM23500074	SLIDING BAR		2	*		
C20	JM23500075	ELASTIC PIN 5		2	*		
C30	JM23500076	UP BLADE GUARD BRACKET		1	*		
C40	JM23180059	CAUTION LABEL		1	*		
174	JM23500064	CONNECTION SHAFT		1			
175	JM23500072	SPRING32		1			
176	JM23500022	FLAT WASHER 8		1			
177	JM23500071	H.S.BOLT M6X12		1			
178	JM23100097	PIN CAP		1			
179	JM23500065	SPRING BRACKET		1			
180	JM23500063	SPRING SUPPORT PIN		1			
181	JM23500070	LASER		1			
182	JM23500068	H.S.BOLT M4X8		2	*		
182-1	JM23100146	H.S.BOLT M4X10	X	2			
183	JM23500069	H.S.SET SCREW		1			
184	JM23100016	FLAT WASHER 4		2			
185	JM23500067	LASER BRACKET		1			
186	JM23100016	FLAT WASHER 4		1			
187	JM23100067	H.S.BOLT M4X12		1	*		
187-1	JM23100146	H.S.BOLT M4X10	X	1			
188	JM23500073	LASER MOVING PLATE		1			
189	JM23100093	PIN C		1	*		
189-1	JM23100193	PIN C	<	1			
190	JM23100150	SEALING RING		1			
191	JM23100096	DEPTH ADJUSTABLE PLATE BOLT		1			
192	JM23100060	FLAT WASHER 8		1			
193	JM23100094	WAVE WASHER 8		1			

194	JM23100092	CUTTING DEPTH ADJUSTABLE PLATE		1			
195	JM23500041	H.S.BOLT M6X40		4			
196	JM23100151	SPRING WASHER 6		4			
197	JM23100190	SPECIAL WASHER 6		4			
198	JM23100014	CROSS HEAD SCREW M4X15		2	*		
198-1	JM23100033	PAN HEAD SCREW M4X12	<	2	*		
199	JM23100015	SPRING WASHER 4		2	*		
200	JM23100016	FLAT WASHER 4		2	*		
201	JM23100141	HEX LOCK NUT 5		1	*		
202	JM23100007	FLAT WASHER 5		1	*		
203	JM23100139	LEVER SCREW		1	*		
204	JM23500045	LEVER SPRING		1	*		
205	JM23500044	LOCK LEVER BRACKET		1	*		
206	JM23500043	LOCK LEVER		1	*		
207	JM23500103	OUTPUT SHAFT		1			
208	JM23100156	KEY 5X10		1			
209	JM23100157	BEARING 6304		1			
210	JM23100158	RETAINING RING 20		1			
211	JM23500104	GEAR WHEEL		1			
212	JM23100160	RETAINING RING 16		1			
213	JM23100161	OUTPUT SHAFT SCREW M8X12		1			
214	JM23510011	GEAR BOX COMPLETE		1			
C10	JM23500105	GEAR BOX		1	*		
C20	JM23100162	BUSH		1	*		
215	JM23100165	CORD GUARD S		1	*		
215-1	JM00000268	PROTECTION TUBE	>	1			
216	JM23000156	POWER SUPPLY CORD ASSY EURO		1			
217	JM23100166	CORD CLAMP		1			
218	JM23100193	PIN C		2	*		
218-1	JM23500040	CROSS HEAD SCREW ST4.2X12	X	2			
219	JM23500108	PROTECTIVE SLEEVE		1			
220	JM23500133	MAGNETIC RING ASSY		1			
221	JM23500109	TRANSFORMER		1			
222	JM23100177	LOCK OFF BUTTON		1			
223	JM23100175	SWITCH LOCK PLATE		1			
224	JM23100171	TERMINAL BLOCK 2P		1			
225	JM23100173	SWITCH LOCK BRACKET		1			
226	JM23100169	CAPACITOR		1			
227	JM23100179	ELECTRIC SWITCH		1	*		
227-1	JM00000712	SWITCH	S	1			
228	JM23100176	SWITCH HANDLE SPRING		1			
229	JM23100174	SWITCH HANDLE		1	*		
229-1	JM00000713	SWITCH LEVER	O	1			
230	JM23500110	BAFFLER RING		1			
231	JM23500137	BALL BEARING 6201		1			
232	JM23500001	ARMATURE ASSY (230V)		1			
232		INC. 231,233					
233	JM23500111	BALL BEARING 608		1			
234	JM23500112	DAMPING RING		1			
235	JM23500113	S.T. CROSS HEAD 4.2X65		2			

236	JM23500004	FIELD 230V		1			
237	JM23510012	MOTOR HOUSING COMPLETE		1			
C10	JM23500114	MOTOR HOUSING		1	*		
C20	JM23500115	BRUSH HOLDER		2	*		
C30	JM23100185	H.S.SCREW M5X8		2	*		
C40	JM23180057	CAUTION LABEL		1	*		
C50	JM23180056	CAUTION LABEL		1	*		
238	JM23500116	BRUSH COVER		2			
239	JM23500117	CARBON BRUSH 2PCS/SET		2	*		
239-1	JM23500117	CARBON BRUSH 2PCS/SET	<	1			
240	JM23100190	SPECIAL WASHER 6		4			
241	JM23500118	CROSS HEAD SCREW M6X60		4			
242	JM23100186	SOFT STARTER		1			
243	JM23500119	MOTOR REAR COVER		1			
244	JM23100167	SELF TAPPING SCREW M4X16		2			
245	JM23500121	RIGHT HANDLE		1			
246	JM23100007	FLAT WASHER 5		3			
247	JM23500123	CROSS HEAD SCREW M5X40		3			
248	JM23100167	SELF TAPPING SCREW M4X16		3			
249	JM23500124	SWITCH BRACKET		1			
250	JM23500125	LASER SWITCH		1			
251	JM23500126	LASER SWITCH PROTECTIVE COV ER		1			
252	JM23500120	ST CROSS HEAD SCREW 4.2X28		2			
253	JM23500107	LEFT HANDLE		1			
254	JM23580018	NAMEPLATE		1	*		
255	JM00000038	EXTENSION TABLE ASSEMBLY		2			
255		INC. 277, 278					
256	JM2708B060	CAUTION LABEL		2			
257	JM23100034	HEX BOLT M6X28		1			
258	JM23100035	ANTI-LOOSEN RING		1			
259	JM23100034	HEX BOLT M6X28		1			
260	JM23100035	ANTI-LOOSEN RING		1			
261	JM23100087	HEX SOCKET SET SCREW M6X8		2			
262	JM23100081	BUFFER A		2			
263	JM23500089	LINEAR BEARING		3			
264	JM23500092	BEARING GASKET		2			
265	JM23500090	SUPPORT ARM		1			
266	JM23500091	ANGLE LIMIT		1			
267	JM23100019	CROSS HEAD SCREW M4X18		1			
268	JM23100016	FLAT WASHER 4		1			
269	JM23500038	BLADE FLANGE		1			
271	JM23500046	UP BLADE GUARD		1			
272	JM23100114	LINK PIN		1			
273	JM23100147	BUFFER		1			
274	JM23100019	CROSS HEAD SCREW M4X18		1			
275	JM23100016	FLAT WASHER 4		1			
276	JM23100016	FLAT WASHER 4		2			
277	JM00000259	WING BOLT M6X14		2			
278	JM00000260	LEVELING FOOT BOLT M8X54		2			
A01	JM23000127	HOLDER		2	*		
A02	JM23570002	SAW BLADE		1	*		

A02-1	D-77344	TCT SAW BLADE FOR MITER SAW	O	1			
A03	JM23510009	VISE ASSEMBLY		1			
C10	JM23500098	GUIDE ROD		1			
C20	JM23100152	WING KNOB,M6X10		1			
C30	JM23500099	CLAMP KNOB		1			
C40	JM27000218	VISE ARM		1			
C50	JM27000219	VISE PLATE		1			
C60	JM23100065	PAN HEAD SCREW M4X8		1			
C70	JM23100016	FLAT WASHER 4		1			
C80	JM23100015	SPRING WASHER 4		1			
A04	JM23510010	DUST BAG ASSY		1			
C10	JM23500100	DUST BAG BEAM		1			
C20	JM23500101	DUST BAG CLAMP		1			
C30	JM23500102	DUST BAG		1			
A05	JM27000328	TRIANGLE PLATE		1			
A06	782230-2	Box wrench 13-3		1			
A07	JM23100144	RING 30		1			
F01	198688-9	Stand set		1			
F02-1	198687-1	Stand set	<	1			

Please state Parts No. when your order.

Print Date 09/09/2026