Model No.LF1000 Flip over saw

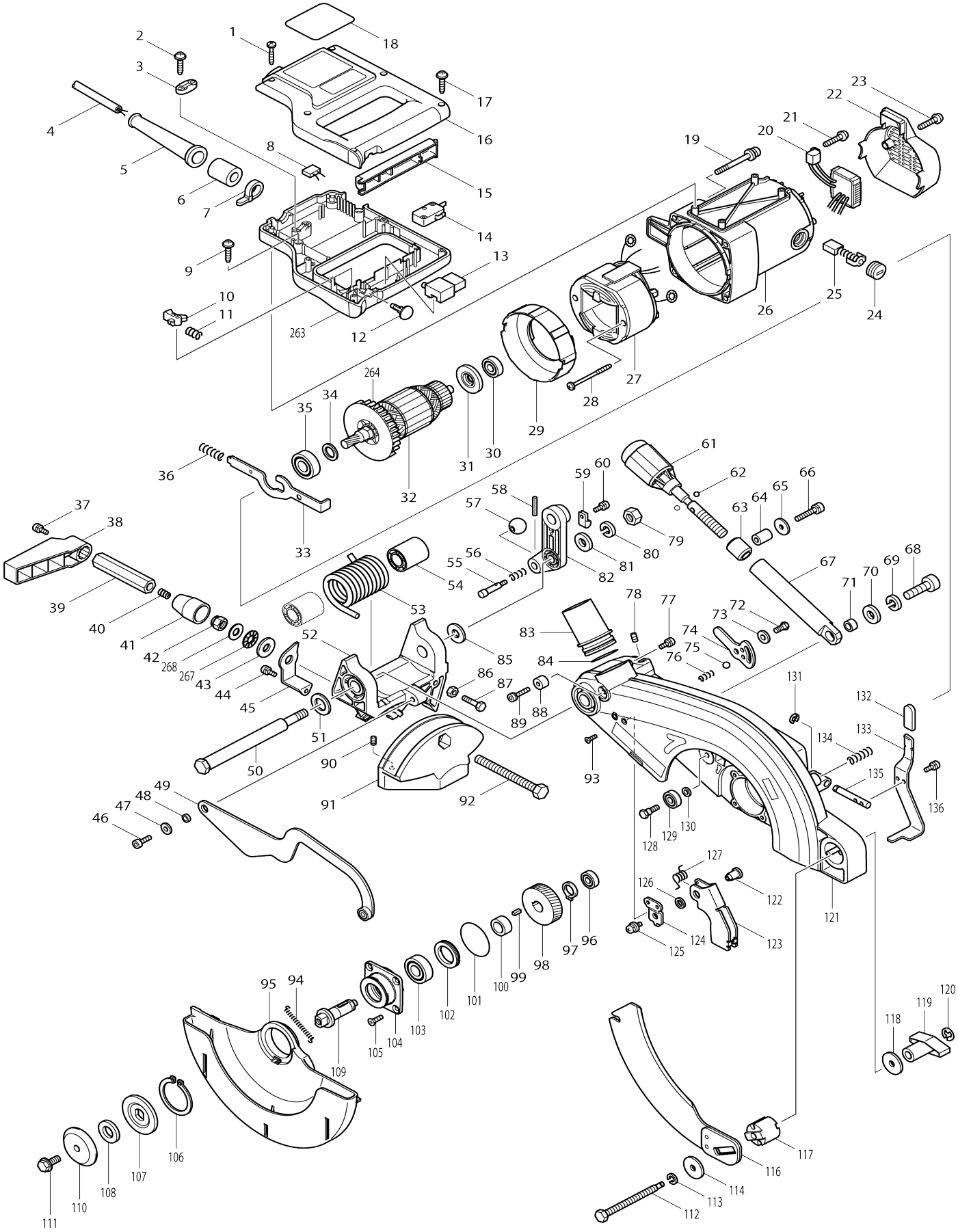

Model No.LF1000 Flip over saw

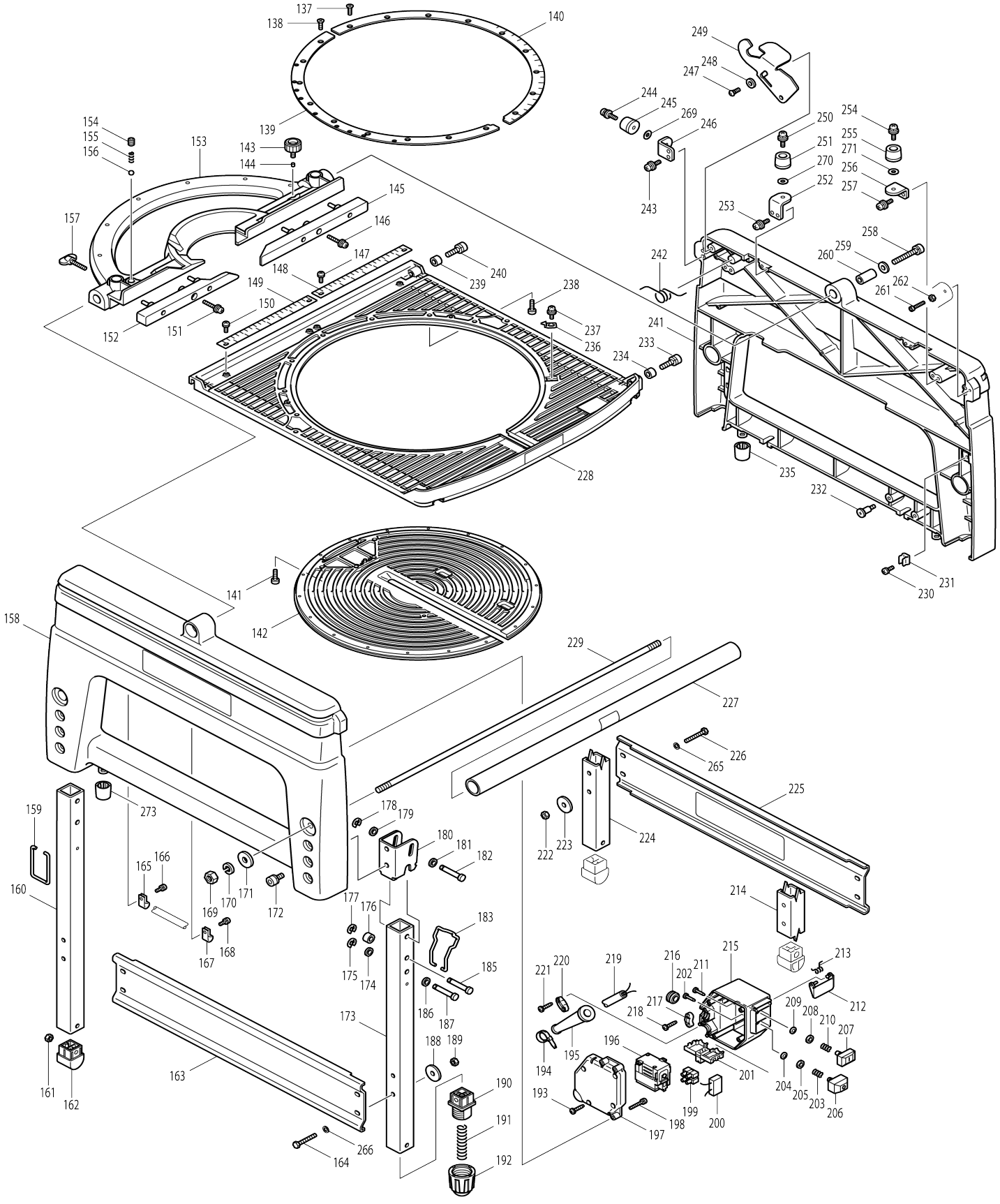

Model No.LF1000 Flip over saw

Item No.	Parts No.	Description	Interchangeability	Q'ty	New/ Old	Note1	Note2
001	265999-8	Binding head tapping screw 4X25		2			
002	265995-6	Binding head tapping screw 4X18		2			
003	687054-0	Strain relief		1	*		
003-1	687149-9	Strain relief	O	1			
004	662971-5	Power supply cord		1			
005	682506-6	Cord guard 12-90		1			
006	688140-0	Line filter		1			
007	687010-0	Band		1			
008	645006-7	Noise suppressor		1			
009	265995-6	Binding head tapping screw 4X18		2			
010	416356-5	Lock off lever		1			
011	231026-3	Compression spring 4		1	*		
011-1	233483-1	Compression spring 4	O	1			
012	416404-0	Switch button		1	*		
012-1	451037-4	Switch button	<	1			
013	651923-1	Switch TG70B		1			
014	651941-9	Switch V-15-2A5		1			
015	416357-3	Switch lever		1	*		
015-1	458790-3	Switch lever	<	1			
016	154574-4	Handle cover complete		1	*		
C10	810087-2	Caution label		1	*		
016-1	188063-7	Handle set	S	1			
C10	810087-2	Caution label		1			
016-1		INC. 263					
017	265995-6	Binding head tapping screw 4X18		4			
018	861365-3	Name plate LF1000		1			
019	911383-2	Pan head screw M6X60 WR		4			
020	631661-1	Controller		1	*		
020-1	631947-3	Controller	<	1			
021	265995-6	Binding head tapping screw 4X18		1			
022	416362-0	Rear cover		1			
023	265995-6	Binding head tapping screw 4X18		2			
024	643650-4	Holder cap 6.5-13.5		2	*		
024-1	643650-4	Holder cap 6.5-13.5	O	2			
025	181044-0	Carbon brush CB-153		1	*		
025-1	194985-1	Carbon brush set CB-153	O	1			
026	154569-7	Motor housing complete		1			
C10	643660-1	Brush holder 6.5-13.5		2	*		
C11	643653-8	Brush holder 6.5X13.5	O	2	*		
C12	643660-1	Brush holder 6.5-13.5	O	2	*		
C13	643653-8	Brush holder 6.5X13.5	O	2	*		
C14	643536-2	Brush holder 6.5X13.5	<	2	*		
C15	643653-8	Brush holder 6.5X13.5	O	2	*		

C16	643536-2	Brush holder 6.5X13.5	O	2			
C20	810086-4	Caution label		1			
027	596273-6	Field assembly 220-240V		1			
C10	654020-2	Ring terminal 36L		2			
C20	654502-4	Non-insulated splice		2			
028	266044-2	Binding head tapping screw 5X60		2			
029	416361-2	Baffle plate		1			
030	211061-7	Ball bearing 6000LLB		1	*		
030-1	211097-6	Ball bearing 6000LLB	O	1			
031	681642-5	Insulation washer		1			
032	516748-9	Armature assembly 220-240V		1			
032		INC. 30,31,34,35,264					
033	345574-7	Shaft lock		1			
034	253147-1	Flat washer 15		1	*		
034-1	267320-7	Flat washer 15	O	1			
035	211206-7	Ball bearing 6202LLB		1			
036	231297-2	Compression spring 9		1	*		
036-1	233467-9	Compression spring 9	O	1			
037	911113-1	Pan head screw M4X10 WR		1			
038	416006-2	Lever 100		1			
039	252192-3	Hex. nut M10-17		1			
040	231266-3	Compression spring 5		1	*		
040-1	233465-3	Compression spring 5	O	1	*		
040-2	231266-3	Compression spring 5	O	1			
041	331691-9	Spacer		1			
042	252130-5	Hex. lock nut M10-17		1	*		
042-1	264005-6	Hex. lock nut M10-17	O	1			
043	253197-6	Flat washer 10		1			
044	911113-1	Pan head screw M4X10 WR		1			
045	816825-0	Pointer		1			
046	922332-4	Hex. socket head bolt M6X20		1	*		
046-1	265551-2	Hex. socket head bolt M6X20	O	1			
047	253804-1	Flat washer 6		1	*		
047-1	267325-7	Flat washer 6	O	1			
048	257270-4	Ring 6		1			
049	154573-6	Link plate complete		1	*		
049-1	141540-0	Link plate complete	<	1			
050	265532-6	Hex. head shoulder bolt M10		1			
051	253707-9	Flat washer 16		1	*		
051-1	267323-1	Flat washer 16	O	1			
052	154570-2	Arm complete		1	*		
C10	816833-1	Bevel scale label		1	*		
052-1	141133-3	Arm complete	<	1			
C10	816833-1	Bevel scale label		1			
053	231681-1	Torsion spring 34		1			
054	416358-1	Sleeve 17		2			
055	256488-4	Shoulder pin 7		1			
056	233429-7	Compression spring 7		1			
057	271601-3	Knob 20		1			
058	951063-8	Spring pin 3-16		1			
059	687049-3	Strain relief		1			

060	911113-1	Pan head screw M4X10 WR		1			
061	271319-6	Knob 40		1			
062	216013-3	Steel ball 6		2	*		
062-1	216030-3	Steel ball 6	O	2			
063	257750-0	Sleeve 13		1			
064	257748-7	Sleeve 6		1			
065	267173-4	Flat washer 6		1	*		
065-1	267313-4	Flat washer 6	O	1			
066	922351-0	Hex. socket head bolt M6X30 W		1	*		
066-1	265552-0	Hex. socket head bolt M6X30	O	1			
067	331689-6	Adjust nut		1			
068	922557-0	Hex. socket head bolt M10X35		1			
069	942251-8	Spring washer 10		1			
070	941252-3	Flat washer 10		1			
071	257747-9	Sleeve 10		1			
072	265984-1	Hex. socket button head bolt M6 X14		1			
073	253823-7	Flat washer 7		1	*		
073-1	267326-5	Flat washer 7	O	1			
074	345553-5	Stopper plate		1			
075	216004-4	Steel ball 7.9		1			
076	231038-6	Compression spring 6		1	*		
076-1	233466-1	Compression spring 6	O	1			
077	911113-1	Pan head screw M4X10 WR		1			
078	266085-8	Hex. socket set screw (flat point) M6X10		1			
079	931502-4	Hex. nut M10		1			
080	942251-8	Spring washer 10		1			
081	941252-3	Flat washer 10		1			
082	317889-2	Connecting rod		1			
083	416133-5	Dust nozzle		1	*		
083-1	419277-0	Dust nozzle	O	1			
084	213460-9	O-ring 35		1			
085	253197-6	Flat washer 10		1			
086	931302-2	Hex. nut M6		1			
087	921342-8	Hex. head bolt M6X25		1			
088	257746-1	Sleeve 5		1			
089	922231-0	Hex. socket head bolt M5X20 W		1	*		
089-1	265550-4	Hex. socket head bolt M5X20	O	1			
090	266085-8	Hex. socket set screw (flat point) M6X10		2			
091	317887-6	Sub arm		1			
092	266377-5	Shoulder bolt M10		1			
093	912112-6	Countersunk head screw M4X10		2			
094	231836-8	Tension spring 4		1			
095	418922-4	Safety cover		1	*		
095-1	453711-0	Safety cover	<	1			
096	211031-6	Ball bearing 608LLB		1	*		
096-1	210043-6	Ball bearing 608LLB	O	1			
097	961055-9	Retaining ring (EXT) S-15		1			
098	226600-0	Helical gear 46		1			
099	254202-2	Key 4		1			

100	257266-5	Ring 15		1			
101	213623-7	O-ring 46		1			
102	285808-5	Bearing retainer 25-36		1	*		
102-1	285846-7	Bearing retainer 25-36	O	1			
103	211206-7	Ball bearing 6202LLB		1			
104	317888-4	Bearing box		1			
105	912222-9	Countersunk head screw M5X16		4			
106	961201-4	Retaining ring (EXT) S-42		1			
107	224333-1	Flange 53		1			
108	257262-3	Ring 16		1	*		
108-1	257295-8	Ring 16	O	1			
109	324543-1	Spindle		1			
110	224400-2	Outer flange 53		1			
111	265355-2	Hex. head flange bolt M8X20		1	*		
111-1	266762-2	Hex. socket head bolt M8X22	<	1			
112	265534-2	Hex. head bolt M8X86		1	*		
112-1	266763-0	Hex. socket head bolt M8X97	<	1			
113	942201-3	Spring washer 8		1			
114	267009-7	Flat washer 8		1	*		
114-1	267312-6	Flat washer 8	O	1			
116	163461-6	Riving knife		1	*		
116-1	163461-6	Riving knife	O	1			
117	331690-1	Knife support		1			
118	267009-7	Flat washer 8		1	*		
118-1	267312-6	Flat washer 8	O	1			
119	252641-0	Thumb nut M8		1			
120	961011-9	Stop ring (EXT) E-4		1			
121	154571-0	Blade case complete		1			
C10	268076-5	Pin 6		2			
C20	817667-5	Caution label		1			
C30	819174-4	Makita logo label		1			
C40	951163-4	Spring pin 5-20		1			
122	324497-2	Guard shaft		1	*		
122-1	324664-9	Guard shaft	O	1			
123	345554-3	Guard		1			
124	345558-5	Guard holder		1			
125	911213-7	Pan head screw M5X12 WR		1			
126	267070-4	Flat washer 10		1	*		
126-1	267327-3	Flat washer 10	O	1			
127	231675-6	Torsion spring 11		1			
128	265533-4	Hex. head shoulder bolt M6		1			
129	211031-6	Ball bearing 608LLB		1	*		
129-1	210043-6	Ball bearing 608LLB	O	1			
130	267173-4	Flat washer 6		1	*		
130-1	267313-4	Flat washer 6	O	1			
131	961012-7	Stop ring (EXT) E-6		1			
132	421589-9	Cap		1			
133	345552-7	Lock lever		1			
134	231297-2	Compression spring 9		1	*		
134-1	233467-9	Compression spring 9	O	1			
135	256855-3	Rod 8		1			
136	911113-1	Pan head screw M4X10 WR		2			

137	912112-6	Countersunk head screw M4X10		9			
138	912112-6	Countersunk head screw M4X10		9			
139	345541-2	Slide plate L		1			
140	345542-0	Slide plate R		1			
141	922332-4	Hex. socket head bolt M6X20		4	*		
141-1	265551-2	Hex. socket head bolt M6X20	O	4			
142	154575-2	Turn table complete		1	*		
C10	256253-1	Pin 5		1	*		
142-1	141631-7	Turn table complete	<	1			
C10	256253-1	Pin 5		1			
143	251815-0	Thumb screw M6X25		1			
144	268068-4	Pin 5		1			
145	154578-6	Sub fence R complete		1	*		
C10	268076-5	Pin 6		2	*		
146	911258-5	Pan head screw M5X35 WR		1	*		
147	911113-1	Pan head screw M4X10 WR		2			
148	816827-6	Scale plate R		1			
149	816826-8	Scale plate L		1			
150	911113-1	Pan head screw M4X10 WR		2			
151	911258-5	Pan head screw M5X35 WR		1	*		
152	154577-8	Sub fence L complete		1	*		
C10	268076-5	Pin 6		2	*		
153	154576-0	Guide fence complete		1	*		
C10	256253-1	Pin 5		2	*		
153-1	141586-6	Guide fence complete	<	1	*		
C10	256253-1	Pin 5		2	*		
153-2	142820-7	Guide fence complete	<	1			
C10	256253-1	Pin 5		2			
154	251966-9	Hex. socket set screw (flat point) M10X12		1	*		
154-1	266392-9	Hex. socket set screw (flat point) M10X12	O	1			
155	231038-6	Compression spring 6		1	*		
155-1	233466-1	Compression spring 6	O	1			
156	216004-4	Steel ball 7.9		1			
157	265710-8	Thumb screw M6X33		1			
158	188010-8	Frame set		1	*		
158		INC. 273			*		
158-1	188862-7	Frame set	<	1			
158-1		INC. 273					
159	345547-0	Hook		1			
160	331687-0	Square pipe 32-510		1			
161	931302-2	Hex. nut M6		3			
162	418927-4	Foot		3			
163	154592-2	Support bracket complete		1			
C10	816831-5	Operation label		1			
164	921367-2	Hex. head bolt M6X45		4			
165	687049-3	Strain relief		1			
166	911113-1	Pan head screw M4X10 WR		1			
167	687049-3	Strain relief		1			
168	911113-1	Pan head screw M4X10 WR		1			
169	931502-4	Hex. nut M10		4			

170	942251-8	Spring washer 10		4			
171	267087-7	Flat washer 10		4	*		
171-1	267328-1	Flat washer 10	O	4			
172	922431-2	Hex. socket head bolt M8X20 W		8	*		
172-1	265553-8	Hex. socket head bolt M8X20	O	8			
173	331686-2	Square pipe 32-475		1			
174	253165-9	Flat washer 8		2	*		
174-1	267321-5	Flat washer 8	O	2			
175	961012-7	Stop ring (EXT) E-6		2			
176	257749-5	Sleeve 8		4			
177	961012-7	Stop ring (EXT) E-6		4			
178	961012-7	Stop ring (EXT) E-6		4			
179	253165-9	Flat washer 8		4	*		
179-1	267321-5	Flat washer 8	O	4			
180	345543-8	Bracket		4			
181	253165-9	Flat washer 8		4	*		
181-1	267321-5	Flat washer 8	O	4			
182	268127-4	Collar HD. pin 8		4			
183	345548-8	Stopper hook		2			
185	268127-4	Collar HD. pin 8		4			
186	253165-9	Flat washer 8		2	*		
186-1	267321-5	Flat washer 8	O	2			
187	268141-0	Collar HD. pin 8		2			
188	267009-7	Flat washer 8		4	*		
188-1	267312-6	Flat washer 8	O	4			
189	931302-2	Hex. nut M6		4			
190	418925-8	Foot bolt		1			
191	233087-9	Compression spring 13		1	*		
191-1	233468-7	Compression spring 13	O	1			
192	418926-6	Foot nut		1			
193	265995-6	Binding head tapping screw 4X18		4			
194	687209-7	Band		1			
195	682540-6	Cord guard 9.3-90		1	*		
195-1	682574-9	Cord guard 10	O	1			
196	652772-9	Relay 305.232.01		1	*		
196-1	652772-9	Relay 305.232.01	O	1	*		
196-2	652772-9	Relay 305.232.01	O	1	*		
196-3	652772-9	Relay 305.232.01	O	1			
197	418924-0	Switch box cover		1			
198	911148-2	Pan head screw M4X25 WR		3			
199	654561-8	Terminal block		1			
200	645206-9	Noise suppressor		1			
201	686035-1	Receptacle sleeve		5			
202	418618-7	Pin		1			
203	231025-5	Compression spring 8		1	*		
203-1	233464-5	Compression spring 8	O	1			
204	443103-1	Felt ring 6		1			
205	253186-1	Flat washer 7		1	*		
205-1	267322-3	Flat washer 7	O	1			
206	418617-9	Switch button off		1			
207	418616-1	Switch button on		1			

208	253186-1	Flat washer 7		1	*		
208-1	267322-3	Flat washer 7	O	1			
209	443103-1	Felt ring 6		1			
210	231025-5	Compression spring 8		1	*		
210-1	233464-5	Compression spring 8	O	1			
211	418618-7	Pin		1			
212	418929-0	Switch cover		1			
213	231682-9	Torsion spring 5		1			
214	331686-2	Square pipe 32-475		1			
215	418923-2	Switch box		1			
216	682511-3	Grommet		1	*		
216-1	682103-8	Grommet	<	1			
217	687054-0	Strain relief		1	*		
217-1	687149-9	Strain relief	O	1			
218	265995-6	Binding head tapping screw 4X18		2			
219	665865-3	Power supply cord 1.0-2-2.5		1			
220	687052-4	Strain relief		1	*		
220-1	687124-5	Strain relief	O	1			
221	265995-6	Binding head tapping screw 4X18		2			
222	931302-2	Hex. nut M6		4			
223	267009-7	Flat washer 8		4	*		
223-1	267312-6	Flat washer 8	O	4			
224	331686-2	Square pipe 32-475		1			
225	345546-2	Support bracket		1			
226	921367-2	Hex. head bolt M6X45		4			
227	154593-0	Pipe 32 complete		2			
C10	819212-2	Makita logo label		2			
228	154572-8	Table complete		1			
C10	810086-4	Caution label		1			
C20	810965-6	Caution label		1			
229	266360-2	Screw M10		2			
230	911113-1	Pan head screw M4X10 WR		1	*		
231	232075-3	Leaf spring		1	*		
231-1	410047-0	Wrench holder 5.6	X	1			
232	266030-3	Shoulder screw M6		2	*		
232-1	266391-1	Flat head shoulder screw M6	O	2			
233	922442-7	Hex. socket head bolt M8X25		1	*		
233-1	265554-6	Hex. socket head bolt M8X25	O	1			
234	257749-5	Sleeve 8		1			
235	418931-3	Cap		2			
236	816128-2	Pointer		1	*		
236-1	816856-9	Pointer	O	1			
237	911108-4	Pan head screw M4X8 WR		1			
238	922332-4	Hex. socket head bolt M6X20		9	*		
238-1	265551-2	Hex. socket head bolt M6X20	O	9			
239	257749-5	Sleeve 8		1			
240	922442-7	Hex. socket head bolt M8X25		1	*		
240-1	265554-6	Hex. socket head bolt M8X25	O	1			
241	188010-8	Frame set		1	*		
241		INC. 235			*		

241-1	188862-7	Frame set	<	1			
241-1		INC. 235					
242	231680-3	Torsion spring 17		1			
243	911333-7	Pan head screw M6X20 WR		4			
244	911333-7	Pan head screw M6X20 WR		2			
245	421906-3	Cushion		2			
246	345550-1	Stopper bracket R		2			
247	265984-1	Hex. socket button head bolt M6 X14		2			
248	253823-7	Flat washer 7		2	*		
248-1	267326-5	Flat washer 7	O	2			
249	345551-9	Lever		1			
250	911333-7	Pan head screw M6X20 WR		2			
251	421906-3	Cushion		2			
252	345550-1	Stopper bracket R		2			
253	911333-7	Pan head screw M6X20 WR		4			
254	911333-7	Pan head screw M6X20 WR		2			
255	421906-3	Cushion		2			
256	345549-6	Stopper bracket F		2			
257	911333-7	Pan head screw M6X20 WR		4			
258	922471-0	Hex. socket head bolt M8X50 W		2	*		
258-1	265555-4	Hex. socket head bolt M8X50	O	2			
259	267236-6	Flat washer 8		2	*		
259-1	267399-8	Flat washer 8	O	2			
260	257751-8	Sleeve 8		2			
261	922137-2	Hex. socket head bolt M4X20		1	*		
261-1	265549-9	Hex. socket head bolt M4X20	O	1			
262	931103-8	Hex. nut M4		1	*		
262-1	931102-0	Hex. nut M4	O	1			
263	416364-6	Handle		1	*		
263-1	188063-7	Handle set	S	1			
C10	810087-2	Caution label		1			
263-1		INC. 16					
264	240003-4	Fan 80		1	*		
265	941152-7	Flat washer 6		4			
266	941152-7	Flat washer 6		4			
267	216413-7	Thrust needle cage 1024		1			
268	253024-7	Flat washer 10		1			
269	253047-5	Flat washer 6		2	*		
269-1	267319-2	Flat washer 6	O	2			
271	253047-5	Flat washer 6		3	*		
271-1	267319-2	Flat washer 6	O	3			
272	253047-5	Flat washer 6		3	*		
272-1	267319-2	Flat washer 6	O	3			
273	418931-3	Cap		2			
A01	122729-9	Ruler assembly		1	*		
C10	154580-9	Rule holder complete		1	*		
C20	251858-2	Thumb screw M6X15		1	*		
C30	265730-2	Thumb screw M6X35		1	*		
C40	266085-8	Hex. socket set screw (flat point) M6X10		1	*		
C50	345424-6	Guide plate		1	*		

C60	345557-7	Nut plate		1	*		
A01		INC. A15			*		
A01-1	122729-9	Ruler assembly	O	1			
C10	251858-2	Thumb screw M6X15		1			
C20	265730-2	Thumb screw M6X35		1			
C30	266085-8	Hex. socket set screw (flat point) M6X10		1			
C40	345692-1	Guide plate		1			
C50	345557-7	Nut plate		1	*		
C51	346628-3	Nut plate	<	1			
C60	331692-7	Ruler A		1			
A01-1		INC. A15					
A02	122732-0	Dust cover assembly		1	*		
C10	252103-8	Hex. lock nut M5-8		1	*		
C20	265746-7	Thumb screw M5X37		1	*		
A02-1	122732-0	Dust cover assembly	O	1			
C10	264004-8	Hex. lock nut M5-8		1			
C20	265746-7	Thumb screw M5X37		1			
A03	122523-9	Dust bag assembly		1	*		
C10	410602-8	Fastener		1	*		
A03-1	122852-0	Dust bag assembly	O	1			
C10	410602-8	Fastener		1			
A04	122728-1	Vise assembly		1	*		
C10	251887-5	Thumb screw M6X10		1	*		
C20	253804-1	Flat washer 6		1	*		
C30	265153-4	Pan head shoulder screw M5X15.5		1	*		
C40	271303-1	Knob 40		1	*		
C50	317892-3	Vise arm		1	*		
C60	322983-7	Vise rod		1	*		
C70	345575-5	Vise plate		1	*		
A04-1	122728-1	Vise assembly	O	1			
C10	251887-5	Thumb screw M6X10		1			
C20	267325-7	Flat washer 6		1			
C30	265153-4	Pan head shoulder screw M5X15.5		1			
C40	271303-1	Knob 40		1			
C50	317892-3	Vise arm		1			
C60	324663-1	Vise rod		1			
C70	345575-5	Vise plate		1			
A05	122730-4	Angle rule assembly		1	*		
C10	163454-3	Guide plate		1	*		
C20	252631-3	Thumb nut M6		1	*		
C30	253047-5	Flat washer 6		1	*		
C40	271401-1	Knob 32		1	*		
C50	331693-5	Ruler B		1	*		
C60	923326-2	Round head square neck bolt M6X18		1	*		
A05-1	122730-4	Angle rule assembly	O	1	*		
C10	163454-3	Guide plate		1	*		
C20	252631-3	Thumb nut M6		1	*		
C30	267319-2	Flat washer 6		1	*		
C40	271401-1	Knob 32		1	*		

C50	331693-5	Ruler B		1	*		
C60	923326-2	Round head square neck bolt M6 X18		1	*		
C61	266371-7	Round head square neck bolt M6 X18	O	1	*		
A05-2	122L86-7	ANGLE RULE ASSEMBLY	<	1			
C10	163454-3	Guide plate		1			
C20	252631-3	Thumb nut M6		1			
C30	267319-2	Flat washer 6		1			
C40	271401-1	Knob 32		1			
C50	327H55-1	MITER GAUGE FENCE		1			
C61	266371-7	Round head square neck bolt M6 X18	O	1			
C70	4137D9-7	MITER GAUGE FENCE COVER		2			
A06	122731-2	Top cover assembly		1	*		
C10	233307-1	Compression spring 7		1	*		
C20	268129-0	Collar HD. pin 8		1	*		
C30	961012-7	Stop ring (EXT) E-6		1	*		
C40	817283-3	Caution label		1	*		
A06-1	122731-2	Top cover assembly	O	1	*		
C10	233469-5	Compression spring 7		1	*		
C20	268129-0	Collar HD. pin 8		1	*		
C30	961012-7	Stop ring (EXT) E-6		1	*		
C40	817283-3	Caution label		1	*		
A06-2	123104-2	Top cover assembly	<	1			
C10	233469-5	Compression spring 7		1			
C20	268129-0	Collar HD. pin 8		1			
C30	961012-7	Stop ring (EXT) E-6		1			
C40	817283-3	Caution label		1			
A07	345555-1	Fix plate		3			
A08	416368-8	Elbow		1			
A09	419043-5	Push stick		1			
A10	762001-3	Triangular rule		1			
A11	921322-4	Hex. head bolt M6X16		3			
A12	782230-2	Box wrench 13-3		1	*		
A12-1	783204-6	Hex. wrench 6	X	1			
A13	817926-7	Caution label		1	*		
A14	B-03838	T.C.T.SAW BLADE 260X30X60T		1	*		
A14-1	D-46408	TCT SAW BLADE 260 X 30 X 60T	O	1			
A15	154580-9	Rule holder complete		1			
C10	810191-7	Caution label		1			
A17	783201-2	Hex. wrench 3		1			
A18	123262-4	Sub fence assembly		1			
C10	142819-2	Sub fence complete		1			
C20	213021-5	O-ring 5		1			
C30	265753-0	Thumb screw M5X24		1			