Model No.9032 Filing Sander

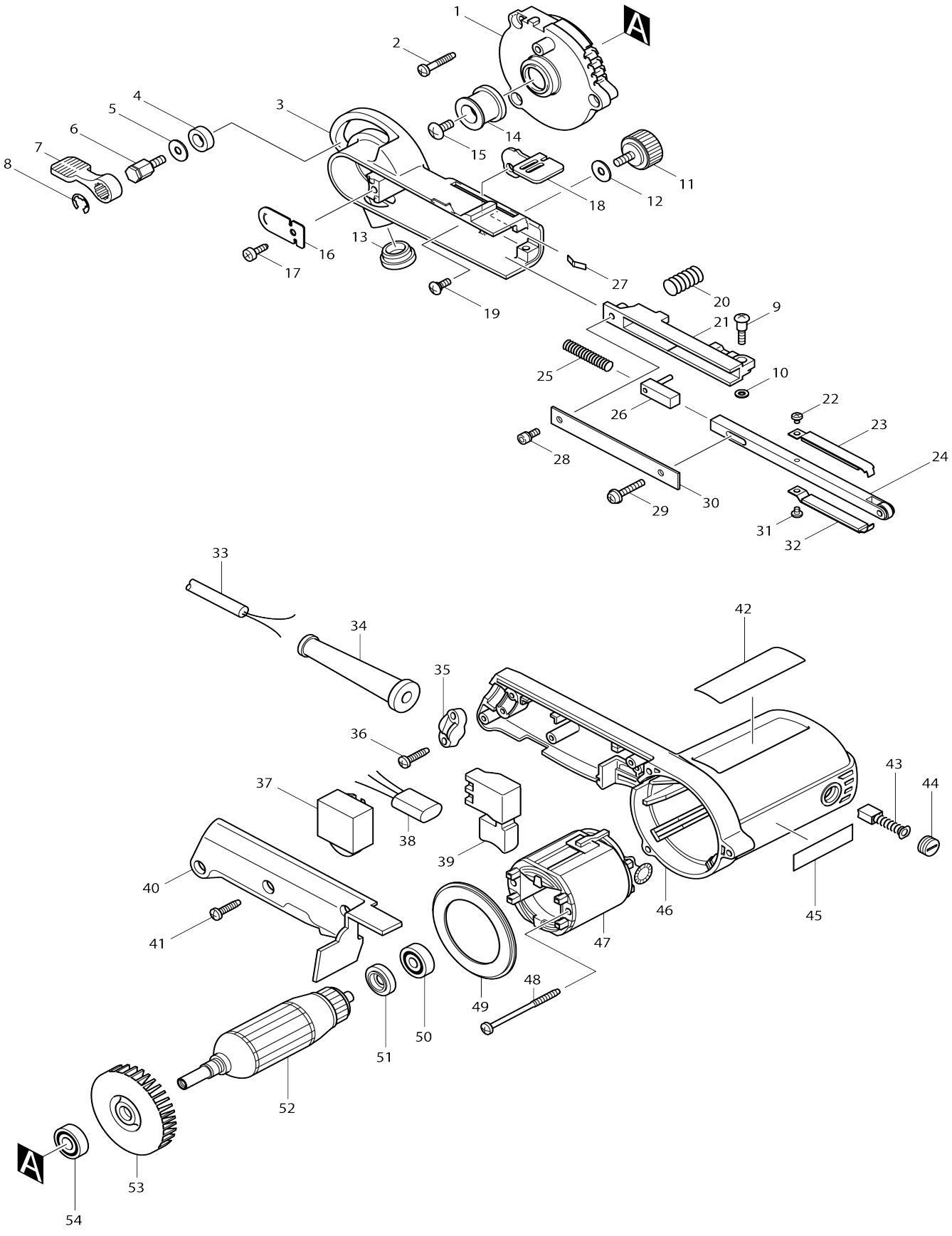

Model No.9032 Filing Sander

Item No.	Parts No.	Description	Interchangeability	Q'ty	New/ Old	Note1	Note2
001	317523-4	Bracket		1			
002	265999-8	Binding head tapping screw 4X25		3			
003	153308-2	Pulley cover complete		1			
004	257249-5	Ring 9		1			
005	253807-5	Flat washer 5		1			
006	265494-8	Hex. head bolt M5X13		1			
007	272229-0	Lever 40		1	*		
007-1	271487-5	LEVER 40	O	1			
008	961014-3	Stop ring (EXT) E-8		1			
009	265090-2	Pan head shoulder screw M4X20		1			
010	941052-1	Flat washer 4		1			
011	265751-4	Thumb screw M5X13		1			
012	253807-5	Flat washer 5		1			
013	421198-4	Cap		1			
014	317522-6	Driving roller		1			
015	265092-8	Truss head screw M5X12		1			
016	345196-3	Safety cover		1			
017	266026-4	Binding head tapping screw 4X12		1			
018	345197-1	Cam lever		1			
019	265028-7	Pan head shoulder screw M4X11		1			
020	233333-0	Compression spring 10		1			
021	317525-0	Arm holder		1			
022	265040-7	Pan head screw M3X4		1			
023	153314-7	Shoe 9 complete		1			
024	153310-5	Arm 9 complete		1			
C10	210064-8	Ball bearing 694LLU		1	*		
C11	210209-8	Ball bearing 694LLU	O	1			
C20	267220-1	Flat washer 4		2			
025	233332-2	Compression spring 6		1			
026	153312-1	Arm tensioner complete		1			
027	232185-6	Leaf spring		1			
028	922111-0	Hex. socket head bolt M4X10 W		1			
029	911138-5	Pan head screw M4X20 WR		1			
030	345195-5	Arm cover		1			
031	265040-7	Pan head screw M3X4		1			
032	153314-7	Shoe 9 complete		1			
033	665394-6	Power supply cord 1.0-2-2.5		1			
034	682502-4	Cord guard 8-85		1			
035	687052-4	Strain relief		1			
036	265995-6	Binding head tapping screw 4X18		2			
037	631185-7	Controller 200V-240V		1	*		
037-1	631677-6	Controller LO3-1103	O	1			
038	645209-3	Noise suppressor		1	*		
038-1	645200-1	Noise suppressor	S	1			
039	651263-7	Switch SGEL206C		1	*		

039-1	651263-7	Switch SGEL206C	O	1			
040	415635-8	Handle cover		1			
041	265995-6	Binding head tapping screw 4X18		3			
042	853483-1	Name plate 9032		1			
043	191940-4	Carbon brush set CB-411		1	*		
043-1	195010-1	Carbon brush set CB-411	O	1			
044	643550-8	Holder cap 5-8		2			
045	819063-3	Makita logo label		1			
046	159747-4	Motor housing complete		1			
C10	643932-4	Brush holder 6X9		2			
047	599347-2	Field assembly 240V		1	*		
C10	654100-4	Ring terminal		2	*		
C20	654501-6	Non-insulated splice P-1.25		2	*		
047-1	599347-2	Field assembly 240V	S	1	*		
C10	654100-4	Ring terminal		2	*		
C20	654501-6	Non-insulated splice P-1.25		2	*		
047-2	599115-3	Field assembly 240V	O	1			
C10	654100-4	Ring terminal		2			
C20	654501-6	Non-insulated splice P-1.25		2			
048	266052-3	Binding head tapping screw 4X60		2			
049	415634-0	Baffle plate		1			
050	210023-2	Ball bearing 627DDW		1			
051	681614-0	Insulation washer		1			
052	517389-4	Armature assembly 240V		1			
052		INC. 50,51,53,54					
053	241884-9	Fan 60		1			
054	210005-4	Ball bearing 608DDW		1			
A01	A-34469	ABRASIVE BELT 9X533-AA80		1			
A02	122652-8	Dust nozzle assembly		1			
F05	192278-0	Hose complete 28-1.5 set		1			
F06	192279-8	Hose complete 28-3.0 set		1			
F09	192349-3	Joint 25 set		1			
F25	193618-5	Stand set		1			
F37	191N60-8	Dust cover set		1			
F38	1917A9-3	Abrasive belt 533-40 set		1			
F39	1917B0-8	Abrasive belt 533-60 set		1			
F40	1917B1-6	Abrasive belt 533-80 set		1			
F41	1917B2-4	Abrasive belt 533-100 set		1			
F42	1917B3-2	Abrasive belt 533-120 set		1			
F43	1917B4-0	Abrasive belt 533-40 set		1			
F44	1917B5-8	Abrasive belt 533-60 set		1			
F45	1917B6-6	Abrasive belt 533-80 set		1			
F46	1917B7-4	Abrasive belt 533-100 set		1			
F47	1917B8-2	Abrasive belt 533-120 set		1			
F48	1917B9-0	Abrasive belt 533-40 set		1			
F49	1917C0-5	Abrasive belt 533-60 set		1			
F50	1917C1-3	Abrasive belt 533-80 set		1			
F51	1917C2-1	Abrasive belt 533-100 set		1			
F52	1917C3-9	Abrasive belt 533-120 set		1			