Model No.2704N Table Saw

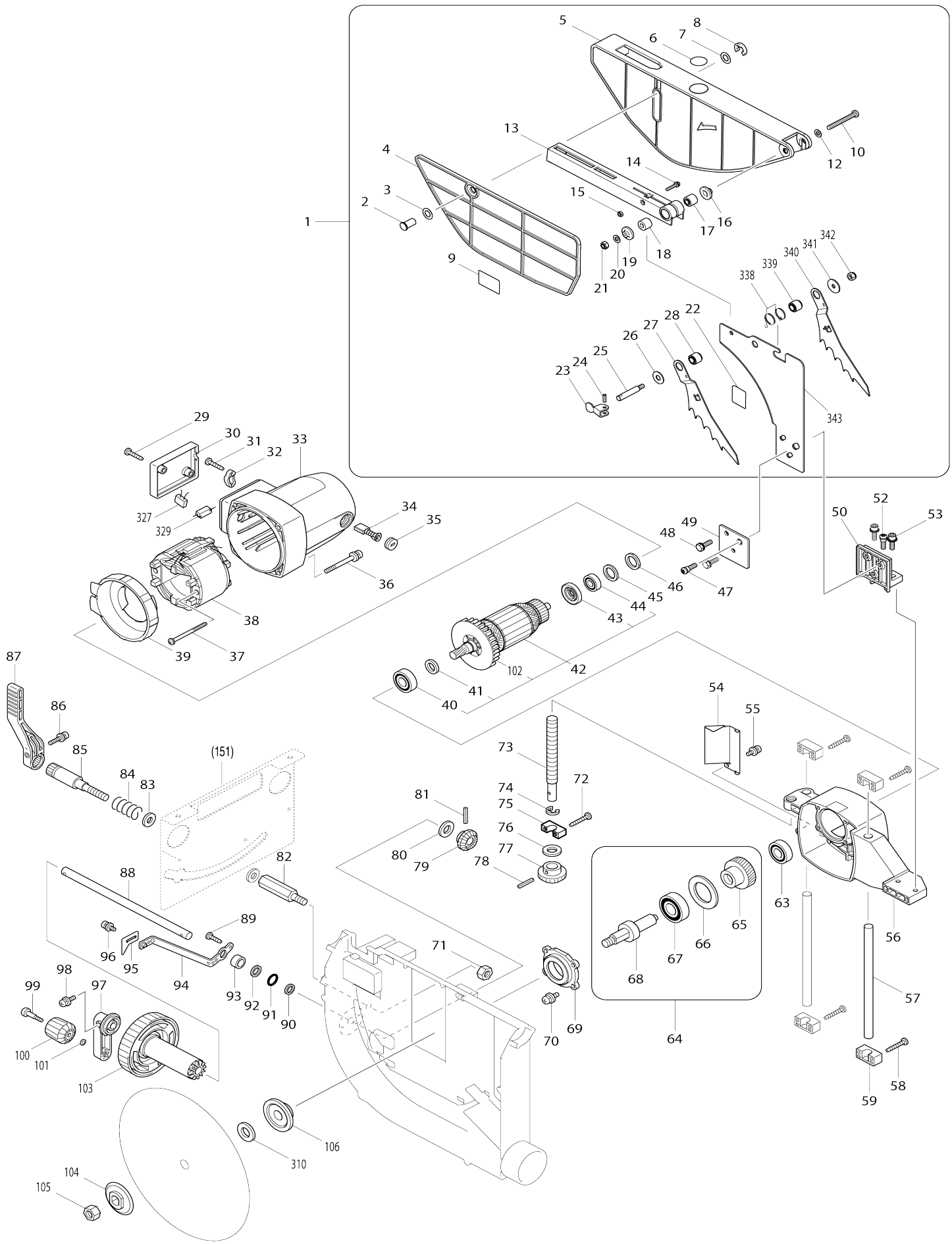

Model No.2704N Table Saw

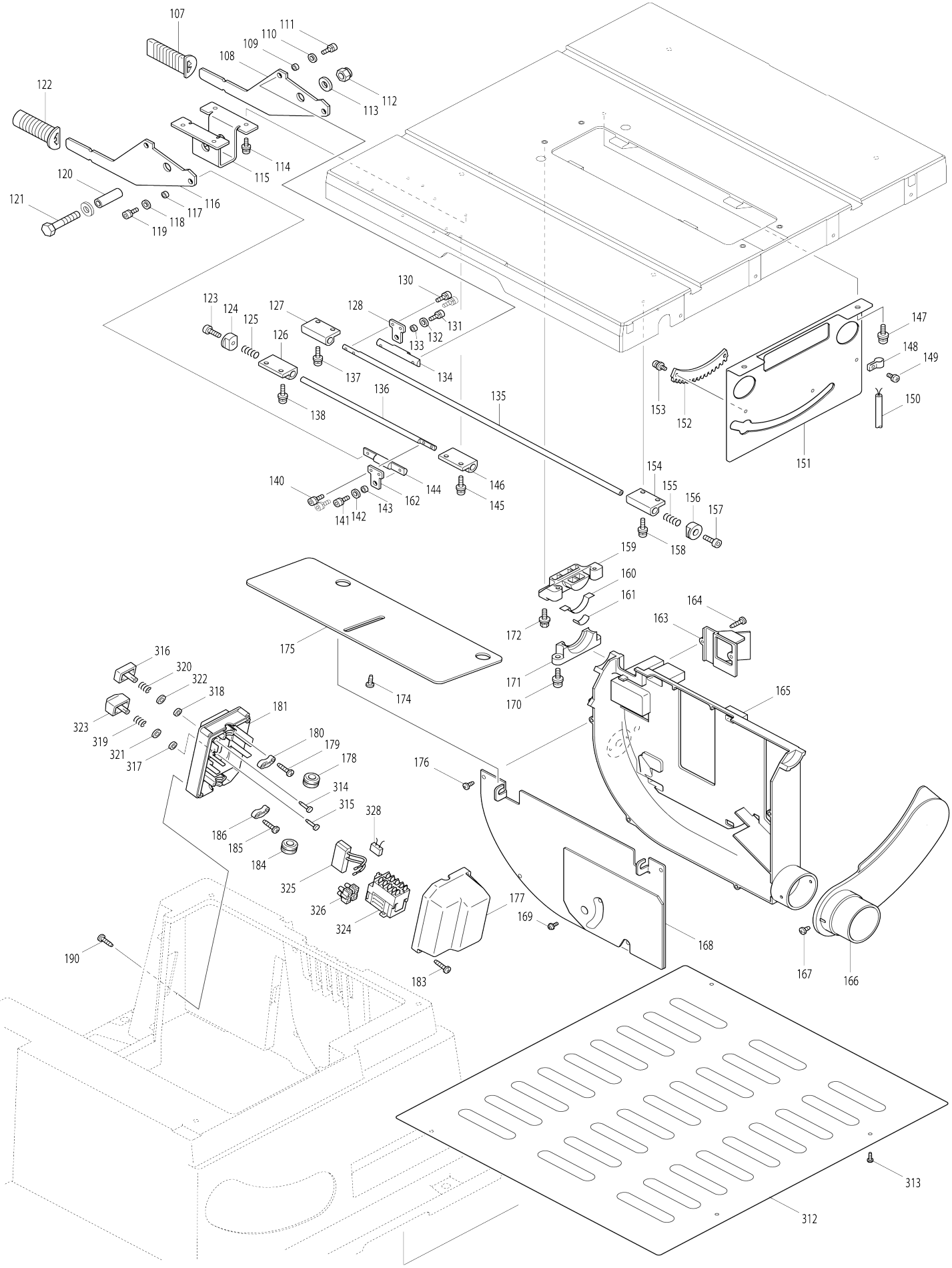

Model No.2704N Table Saw

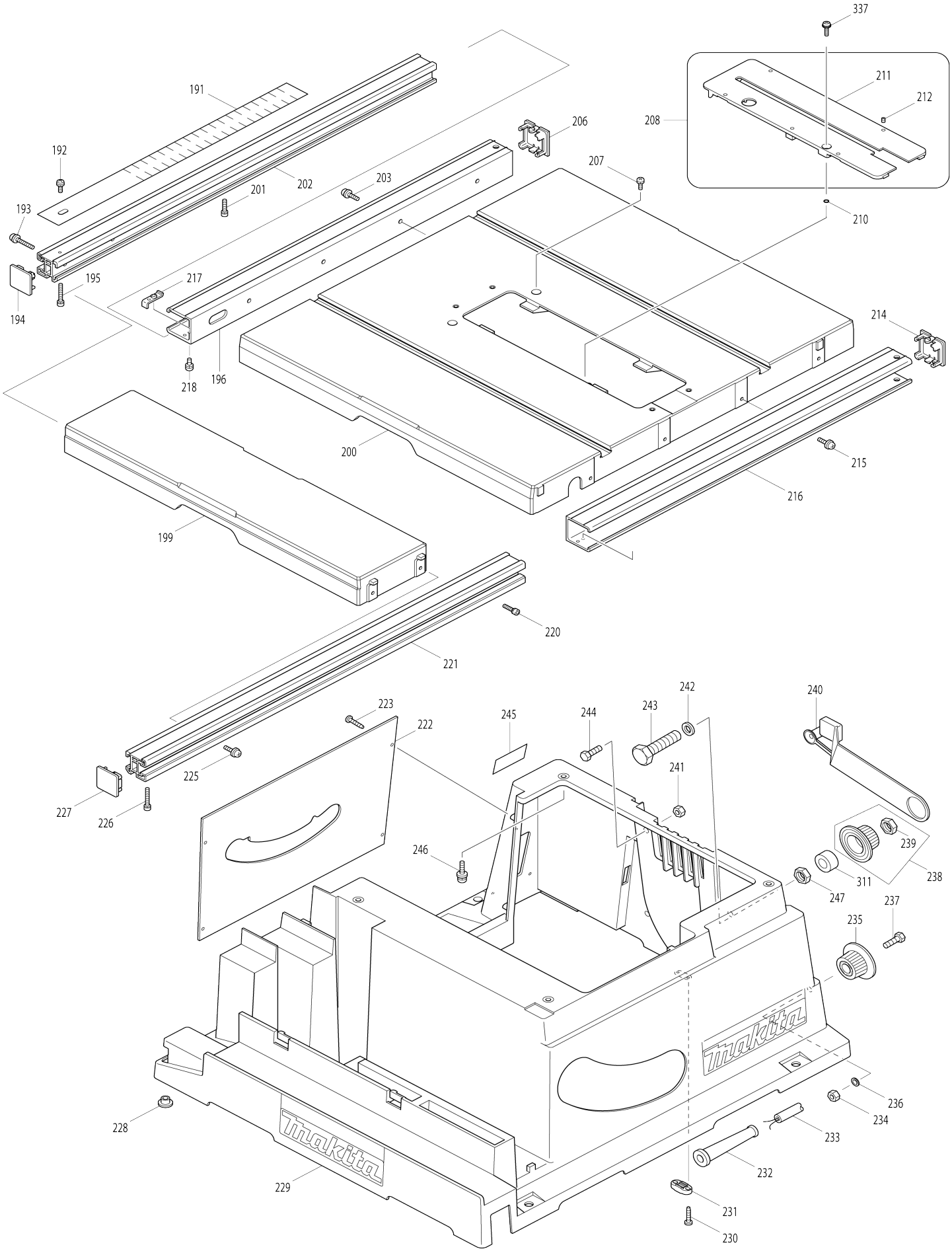

Model No.2704N Table Saw

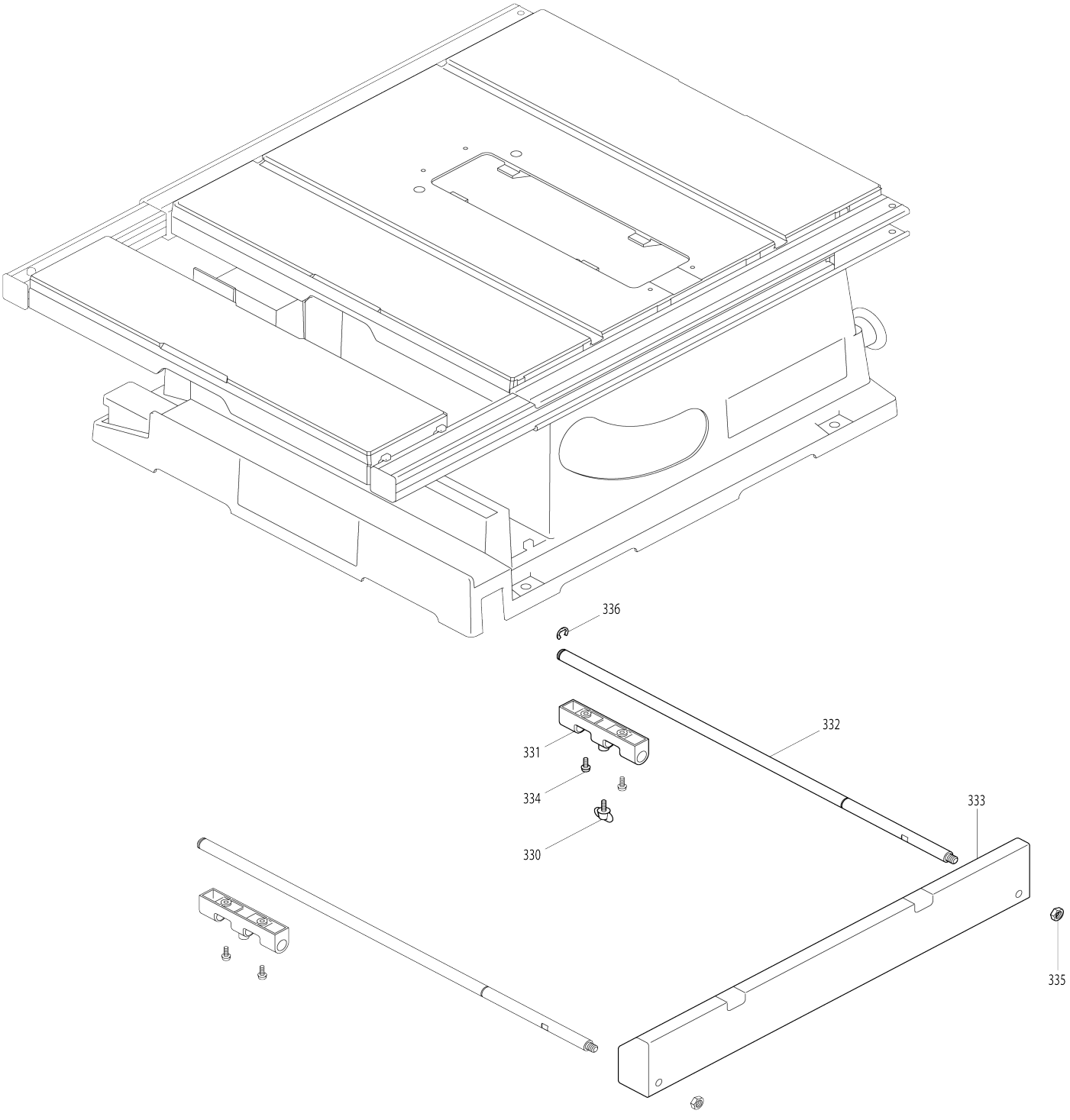

Model No.2704N Table Saw

Item No.	Parts No.	Description	Interchangeability	Q'ty	New/ Old	Note1	Note2
001	123998-5	Safety guard assembly		1			
001		INC. 2-10,12-28,338-343					
002	268135-5	Flat fillister HD. pin 10		1			
003	253758-2	Flat washer 10		1			
004	418910-1	Sub cover		1	*		
004-1	458606-2	Sub cover	X	1			
005	457741-3	Cover		1			
006	813L22-1	Caution label		1			
007	253758-2	Flat washer 10		1			
008	961015-1	Stop ring (EXT) E-9		1			
009	890408-4	Caution label		1			
010	251558-4	Hexalobular socket head bolt M6 X50		1			
012	941151-9	Flat washer 6		1			
013	457740-5	Top guard		1			
014	911138-5	Pan head screw M4X20 WR		1			
015	931102-0	Hex. nut M4		1			
016	344533-8	Collar		1			
017	326990-2	Sleeve 6		1			
018	326990-2	Sleeve 6		1			
019	344533-8	Collar		1			
020	941151-9	Flat washer 6		1			
021	252014-7	Hex. lock nut M6-10		1			
022	817G70-2	Operation label		1			
023	345583-6	Lock lever		1			
024	951104-0	Spring pin 4-12		1			
025	326989-7	Lock shaft		1			
026	253731-2	Flat washer 8		1			
027	347233-9	Finger R		1			
028	326991-0	Sleeve 8		1			
029	265995-6	Binding head tapping screw 4X18		2	*		
029-1	265A48-7	Tapping screw 4X18	O	2	*		
029-2	265B67-9	Binding head tapping screw 4X18	O	2			
030	416341-8	Cover		1			
031	265995-6	Binding head tapping screw 4X18		2	*		
031-1	265A48-7	Tapping screw 4X18	O	2	*		
031-2	265B67-9	Binding head tapping screw 4X18	O	2			
032	687054-0	Strain relief		1			
033	154602-5	Motor housing complete		1			
C10	643653-8	Brush holder 6.5X13.5		2			
034	181044-0	Carbon brush CB-153		1	*		
034-1	194985-1	Carbon brush set CB-153	O	1			
035	643650-4	Holder cap 6.5-13.5		2			
036	911383-2	Pan head screw M6X60 WR		4			
037	266029-8	Binding head tapping screw 5X6		2	*		

		5					
037-1	266352-1	Binding head tapping screw 5X6 5	O	2			
038	599546-6	Field assembly 220-240V		1			
C10	654020-2	Ring terminal 36L		2			
C20	654553-7	Non-insulated splice 34137		2			
039	416331-1	Baffle plate		1			
040	211228-7	Ball bearing 6202DDW		1			
041	253147-1	Flat washer 15		1			
042	518765-5	Armature assembly 240V		1			
042		INC. 40,41,43,44,102					
043	681640-9	Insulation washer		1			
044	211088-7	Ball bearing 6000DDW		1			
045	253198-4	Flat washer 18		1			
046	261129-9	Urethane washer 18		1			
047	251559-2	Hexalobular socket head bolt M6 X20		1			
048	921331-3	Hex. head bolt M6X20 W		2			
049	347235-5	Pressure plate		1			
050	319602-4	Knife holder		1			
052	251559-2	Hexalobular socket head bolt M6 X20		1			
053	922334-0	Hex. socket head bolt M6X20 WG		2			
054	344536-2	Gear housing plate		1			
055	911213-7	Pan head screw M5X12 WR		1			
056	126760-7	Gear housing complete		1			
C10	263005-3	Rubber pin 6		1			
057	323736-7	Guide bar		2			
058	266040-0	Binding head tapping screw 4X2 5		8			
059	416340-0	Guide bar retainer		4			
063	211051-0	Ball bearing 609LLB		1			
064	154595-6	Spindle complete		1			
064		INC. 65-68					
065	226602-6	Helical gear 42		1			
066	267170-0	Flat washer 34		1			
067	211278-2	Ball bearing 6203DDW		1			
068	324556-2	Spindle		1			
069	316933-2	Bearing box		1			
070	911233-1	Pan head screw M5X20 WR		4			
071	931502-4	Hex. nut M10		1			
072	266040-0	Binding head tapping screw 4X2 5		2			
073	322968-3	Screw bar		1			
074	961016-9	Stop ring (EXT) E-10		1			
075	416339-5	Screw bar retainer		1			
076	941302-4	Flat washer 12		1			
077	226747-0	Straight bevel gear 15		1			
078	951116-3	Spring pin 4-20		1			
079	226747-0	Straight bevel gear 15		1			
080	941302-4	Flat washer 12		1			
081	951116-3	Spring pin 4-20		1			
082	324562-7	Lock lever connector		1			

083	253024-7	Flat washer 10		2			
084	231315-6	Compression spring 14		1			
085	322967-5	Lock lever shaft		1			
086	922232-8	Hex. socket head bolt M5X20		1			
087	272248-6	Lever 120		1			
C10	931202-6	Hex. nut M5		1			
088	324563-5	Handle shaft		1			
089	266034-5	Binding head tapping screw 4X16		2			
090	253143-9	Flat washer 12		1			
091	213107-5	O-ring 12		1			
092	253052-2	Flat washer 12		1			
093	214114-1	Plane bearing 12		1			
094	345520-0	Stay		1			
095	344543-5	Pointer		1			
096	922103-9	Hex. socket head bolt M4X6 WR		1			
097	271074-0	Arm 60		1			
C10	931202-6	Hex. nut M5		1			
098	911223-4	Pan head screw M5X16 WR		1			
099	251382-5	Pan head shoulder screw M5X35		1			
100	271423-1	Knob 32		1			
101	267010-2	Flat washer 5		1			
102	240003-4	Fan 80		1	*		
103	271073-2	Handle		1			
104	224482-4	Outer flange 53		1			
105	252155-9	Hex. nut M12-19		1			
106	224401-0	Inner flange 53		1			
107	273523-3	Grip		1			
108	345534-9	Handle plate		1			
109	257161-9	Ring 4		1			
110	941051-3	Flat washer 4		1			
111	922116-0	Hex. socket head bolt M4X12 W		1			
112	252130-5	Hex. lock nut M10-17		1			
113	941251-5	Flat washer 10		2			
114	911223-4	Pan head screw M5X16 WR		4			
115	345539-9	Handle plate holder		1			
116	345534-9	Handle plate		1			
117	257161-9	Ring 4		1			
118	941051-3	Flat washer 4		1			
119	922116-0	Hex. socket head bolt M4X12 W		1			
120	257753-4	Sleeve 10		1			
121	265536-8	Hex. head bolt M16X65		1			
122	273523-3	Grip		1			
123	265382-9	Hex. socket head bolt M5X20		1			
124	324559-6	Hook ring		1			
125	233229-5	Compression spring 8		1			
126	418655-1	Rod holder		1			
127	418655-1	Rod holder		1			
128	345535-7	Joint plate		1			
130	922116-0	Hex. socket head bolt M4X12 W		2			
131	922116-0	Hex. socket head bolt M4X12 W		1			
132	941051-3	Flat washer 4		1			

133	257161-9	Ring 4		1			
134	324675-4	Rod joint		1			
135	324673-8	Rod R		1			
136	324674-6	Rod F		1			
137	911128-8	Pan head screw M4X16 WR		2			
138	911128-8	Pan head screw M4X16 WR		2			
140	922116-0	Hex. socket head bolt M4X12 W		2			
141	922116-0	Hex. socket head bolt M4X12 W		1			
142	941051-3	Flat washer 4		1			
143	257161-9	Ring 4		1			
144	324675-4	Rod joint		1			
145	911128-8	Pan head screw M4X16 WR		2			
146	418655-1	Rod holder		1			
147	911323-0	Pan head screw M6X16 WR		2			
148	687049-3	Strain relief		1			
149	251308-7	Pan head screw M4X10		1			
150	664094-5	Power supply cord 1.25-5-0.5		1			
151	345628-0	Plate		1			
152	416333-7	Rack plate		1			
153	911213-7	Pan head screw M5X12 WR		2			
154	418655-1	Rod holder		1			
155	233229-5	Compression spring 8		1			
156	324559-6	Hook ring		1			
157	265382-9	Hex. socket head bolt M5X20		1			
158	911128-8	Pan head screw M4X16 WR		2			
159	318020-3	Adjust block		1			
160	344529-9	Slide seat		2			
161	232174-1	Leaf spring		2			
162	345535-7	Joint plate		1			
163	416439-1	Dust guide		1			
164	266034-5	Binding head tapping screw 4X16		2			
165	318253-0	Frame		1	*		
165-1	312J83-1	Frame	O	1			
166	418917-7	Dust joint		1			
167	266061-2	Binding head tapping screw 4X8		2			
168	154599-8	Frame cover complete		1			
169	911114-9	Pan head screw M4X10 WG		1			
170	911333-7	Pan head screw M6X20 WR		4			
171	416332-9	Frame retainer		2			
172	265460-5	Hex. head bolt M6X20		2			
174	266300-0	Binding head tapping screw 4X18		2			
175	413097-4	Slide cover		1			
176	266035-3	Binding head tapping screw 5X12		4			
177	418918-5	Switch box		1			
178	682511-3	Grommet		1	*		
178-1	682103-8	Grommet	<	1			
179	265995-6	Binding head tapping screw 4X18		2	*		
179-1	265A48-7	Tapping screw 4X18	O	2	*		
179-2	265B67-9	Binding head tapping screw 4X1	O	2			

		8					
180	687054-0	Strain relief		1			
181	418912-7	Switch base		1			
183	265995-6	Binding head tapping screw 4X18		2	*		
183-1	265A48-7	Tapping screw 4X18	O	2	*		
183-2	265B67-9	Binding head tapping screw 4X18	O	2			
184	682511-3	Grommet		1	*		
184-1	682103-8	Grommet	<	1			
185	265995-6	Binding head tapping screw 4X18		2	*		
185-1	265A48-7	Tapping screw 4X18	O	2	*		
185-2	265B67-9	Binding head tapping screw 4X18	O	2			
186	687052-4	Strain relief		1			
190	266192-7	Binding head tapping screw 4X14		3	*		
190-1	266385-6	Binding head tapping screw 4X14	O	3			
191	816844-6	Inner scale plate		1			
192	251308-7	Pan head screw M4X10		1			
193	911253-5	Pan head screw M5X30 WR		2			
194	418908-8	Inner rail end		1			
195	922146-1	Hex. socket head bolt M4X25 W		1			
196	154705-5	Front outer rail complete		1			
C10	816843-8	Outer scale plate		1			
199	317877-9	Sub table		1			
200	158952-0	Table complete		1			
201	922126-7	Hex. socket head bolt M4X16 W		1			
202	158104-3	Front inner rail complete		1			
203	911233-1	Pan head screw M5X20 WR		4			
206	418907-0	Outer rail end		1			
207	265045-7	Pan head screw M5X18		2			
208	126901-5	Center cover assembly		1			
210	213023-1	O-ring 4		1			
211	319717-7	Center cover		1			
212	266264-8	Hex. socket set screw (flat point) M5X6		4			
214	418907-0	Outer rail end		1			
215	911233-1	Pan head screw M5X20 WR		4			
216	317867-2	Rear outer rail		1			
217	345529-2	Rail stopper		1			
218	251308-7	Pan head screw M4X10		1			
220	922126-7	Hex. socket head bolt M4X16 W		1			
221	158103-5	Rear inner rail complete		1			
222	345533-1	Base front cover		1			
223	266192-7	Binding head tapping screw 4X14		4	*		
223-1	266385-6	Binding head tapping screw 4X14	O	4			
225	911253-5	Pan head screw M5X30 WR		2			
226	922146-1	Hex. socket head bolt M4X25 W		1			
227	418908-8	Inner rail end		1			

228	286212-1	Cap 20		4			
229	154608-3	Base complete		1	*		
C10	810107-2	Caution label		1	*		
C20	819176-0	Makita logo plate		3	*		
229-1	154608-3	Base complete	O	1			
C10	810107-2	Caution label		1			
C20	819176-0	Makita logo plate		1	*		
C21	8109C1-3	MAKITA LOGO PLATE	O	1			
C40	8105T4-2	MAKITA LOGO LABEL		2			
230	265995-6	Binding head tapping screw 4X18		2	*		
230-1	265A48-7	Tapping screw 4X18	O	2	*		
230-2	265B67-9	Binding head tapping screw 4X18	O	2			
231	687052-4	Strain relief		1			
232	682516-3	Cord guard 9.3-85		1	*		
232-1	682504-0	Cord guard 10-85	O	1			
233	665865-3	Power supply cord 1.0-2-2.5		1			
234	931302-2	Hex. nut M6		2			
235	271318-8	Knob 37		2			
236	941151-9	Flat washer 6		2			
237	921342-8	Hex. head bolt M6X25		2			
238	271320-1	Knob 37		1			
238		INC. 239					
239	252197-3	Hex. nut M14		1			
240	421926-7	Holder		1			
241	931402-8	Hex. nut M8		1			
242	253797-2	Flat washer 14		1			
243	265537-6	Hex. head bolt M14X65		1			
244	921462-8	Hex. head bolt M8X40		1			
245	854B85-8	Name plate 2704N		1			
246	911344-2	Pan head screw M6X25 WG		4			
247	252197-3	Hex. nut M14		1			
310	257262-3	Ring 16		1			
311	262559-7	Sleeve 14		1			
312	345536-5	Base under cover		1			
313	266192-7	Binding head tapping screw 4X14		4	*		
313-1	266385-6	Binding head tapping screw 4X14	O	4			
314	418618-7	Pin		1			
315	418618-7	Pin		1			
316	418616-1	Switch button on		1			
317	443103-1	Felt ring 6		1			
318	443103-1	Felt ring 6		1			
319	231025-5	Compression spring 8		1			
320	231025-5	Compression spring 8		1			
321	253186-1	Flat washer 7		1			
322	253186-1	Flat washer 7		1			
323	418617-9	Switch button off		1			
324	652772-9	Relay 305.232.01		1	*		
324-1	652772-9	Relay 305.232.01	O	1	*		
324-2	652772-9	Relay 305.232.01	O	1	*		

324-3	652772-9	Relay 305.232.01	O	1			
325	631613-2	Soft start circuit		1			
326	654561-8	Terminal block		1			
327	645006-7	Noise suppressor		1			
328	645105-5	Noise suppressor		1			
329	646049-2	Choke coil		1			
330	265740-9	Thumb screw M5X15		2			
331	317879-5	Slide rod holder		2			
332	324564-3	Rear rod		2			
333	345537-3	Rear table		1			
334	922221-3	Hex. socket head bolt M5X16 W		4			
335	931502-4	Hex. nut M10		2			
336	961016-9	Stop ring (EXT) E-10		2			
337	911233-1	Pan head screw M5X20 WR		1			
338	232387-4	Torsion spring 17		1			
339	326991-0	Sleeve 8		1			
340	347232-1	Finger L		1			
341	253010-8	Flat washer 6		1			
342	252014-7	Hex. lock nut M6-10		1			
343	347234-7	Riving knife		1			
A01	B-17712	T.C.T. SAW BLADE 260X30X24T		1	*		
A01-1	D-77322	TCT SAW 260X40T	O	1			
A02	419093-0	Joint		1			
A03	457742-1	Push stick		1			
A04	781038-1	Wrench 19		1			
A05	782024-5	Offset wrench 13-22		1			
A06	783203-8	Hex. wrench 5		1			
A07	122734-6	Angle rule assembly		1	*		
A07		COMPO-PARTS			*		
A07-1	127069-0	Angle rule assembly	<	1			
A07-1		COMPO-PARTS					
A08	122739-6	Guide rule assembly		1			
A08		COMPO-PARTS					
F01	194086-5	Left table set		1			
F02	194087-3	Rear table set		1			
F03	194093-8	Stand set		1			
F04	194241-9	Sliding guide set		1	*		
F04-1	199376-1	Sliding guide set	<	1			
F05	419093-0	Joint		1			