Model No.UC006G Cordless Chain Saw

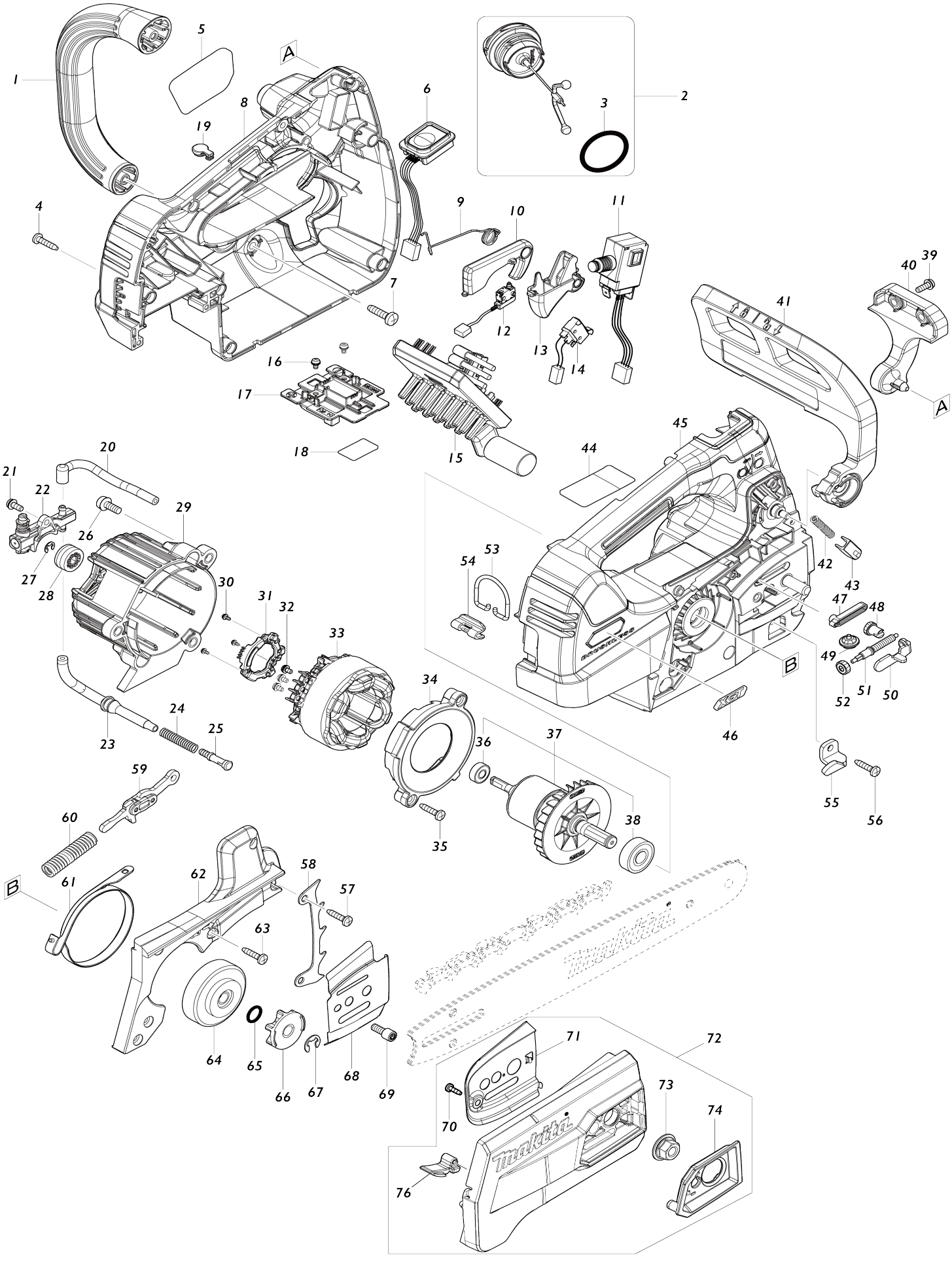

Model No.UC006G Cordless Chain Saw

Item No.	Parts No.	Description	Interchangeability	Q'ty	New/ Old	Note1	Note2
001	413979-0	Front handle		1			
002	122A77-2	Tank cap assembly		1			
002		INC. 3					
003	213080-9	O-ring 29.5		1	*		
003-1	213A30-0	O-ring 29.5	O	1			
004	266326-2	Binding head tapping screw 4X18		8			
005	8041P6-6	Model No. label UC006G		1	*		
005-1	810R17-1	Model No. label DUC353	O	1			
006	141G07-0	Switch circuit complete		1			
C10	810D46-0	Switch label		1			
007	266420-0	Binding head tapping screw 5X20		2	*		
007-1	265C57-8	Tapping screw 5X20	O	2			
008	183U56-5	Housing set		1	*		
C10	263005-3	Rubber pin 6		2	*		
008		INC. 19,45			*		
008-1	1831C9-5	Housing set	S	1	*		
C10	263005-3	Rubber pin 6		2	*		
008-1		INC. 19,45			*		
008-2	1832C1-7	HOUSING SET	<	1			
C10	263005-3	Rubber pin 6		2			
008-2		INC. 19,45					
009	232713-7	Torsion spring 10		1	*		
009-1	232867-0	Torsion spring 10	S	1			
010	413987-1	Catch lever		1	*		
010-1	141V70-3	Lock off lever complete	S	1			
011	650011-1	Switch C3JR-4BM-PAND3		1			
012	632L49-0	Switch unit		1	*		
013	459282-5	Switch lever		1			
014	632L48-2	Switch unit		1			
015	620F70-5	Controller		1	*		
C10	688131-1	Line filter		2	*		
C11	688131-1	Line filter	O	2	*		
015-1	620P50-1	Controller	S	1			
C11	688131-1	Line filter	O	2			
016	652031-1	Pan head screw M3X6		2			
017	632S63-8	Terminal unit		1			
018	8110Y2-4	Serial No. label UC006G		1			
019	422467-6	Cap		1			
020	422764-0	Oil tube 3-85		1			
021	911113-1	Pan head screw M4X10 WR		1			
022	142156-4	Oil pump complete		1			
023	422765-8	Oil tube 3-109		1			
024	231975-4	Spring		1			
025	452666-6	Nipple		1			
026	911218-7	Pan head screw M5X14 WR		3			
027	961011-9	Stop ring (EXT) E-4		1			

028	226884-0	Worm gear		1			
029	413904-1	Motor housing		1			
030	652093-9	Pan head screw M2X5		3	*		
030-1	652119-7	Pan head screw M2X6	O	3			
031	620F73-9	Sensor unit		1			
032	652069-6	Flat head screw M3X6		3			
033	629A85-9	Stator		1			
034	413980-5	Baffle plate		1	*		
034-1	413V76-4	Baffle plate	<	1			
035	266326-2	Binding head tapping screw 4X18		2			
036	210026-6	Ball bearing 696ZZ		1			
037	519710-3	Rotor assembly		1			
037		INC. 36,38					
038	210059-1	Ball bearing 6000DDW		1			
039	911118-1	Pan head screw M4X12 WR		2			
040	413907-5	Front hand guard retainer		1			
041	141E58-1	Front hand guard complete		1			
C10	8042N8-4	Caution label		1			
042	232714-5	Compression spring 3		1			
043	313212-9	Hand guard guide		1			
044	8110Y1-6	Name plate UC006G		1			
045	183U56-5	Housing set		1	*		
C10	263005-3	Rubber pin 6		2	*		
045		INC. 8,19			*		
045-1	1831C9-5	Housing set	S	1	*		
C10	263005-3	Rubber pin 6		2	*		
045-1		INC. 8,19			*		
045-2	1832C1-7	HOUSING SET	<	1			
C10	263005-3	Rubber pin 6		2			
045-2		INC. 8,19					
046	8012U4-2	XGT logo label		1			
047	422466-8	Grommet		1			
048	227620-7	Drive gear		1			
049	227634-6	Straight bevel gear 14		1			
050	347517-5	Tension slide		1			
051	327317-9	Adjust screw		1			
052	227496-2	Straight bevel gear 14		1			
053	281222-3	Hook		1			
054	347514-1	Hook support		1	*		
054-1	347D19-5	Hook support	S	1			
055	347516-7	Chain catcher		1			
056	266326-2	Binding head tapping screw 4X18		1			
057	266326-2	Binding head tapping screw 4X18		2			
058	346809-9	Spike bumper		1			
059	141E60-4	Link plate complete		1			
060	232452-9	Compression spring 7		1			
061	347864-4	Brake band		1			
062	413981-3	Housing R cover		1			
063	266326-2	Binding head tapping screw 4X18		5			

064	162979-4	Brake drum		1			
065	213060-5	O-ring 10		1			
066	191V92-3	Sprocket 9 set		1			
067	961013-5	Stop ring (EXT) E-7		1			
068	347533-7	Guide plate L		1			
069	266905-6	Hexalobular socket head bolt M5 X12		1			
070	266007-8	Binding head tapping screw 3X1 0		1			
071	347534-5	Guide plate R		1			
072	136573-8	Sprocket cover assembly		1			
072		INC. 70,71,73,74,76					
073	162494-8	Flange nut complete		1			
074	413986-3	Nut cover		1			
076	422310-9	Chip guide		1			
077	324616-0	Hose clamp		1	*		
077-1	345920-4	Hose clamp	O	1			
A01	168407-7	Guide bar 10		1	*		
A01-1	1911A1-3	Guide bar 10 set	<	1			
A02	458501-6	Guide bar case		1	*		
A02-1	458501-6	Guide bar case	O	1			
A03	199897-3	Oil vessel set		1			
A04	191G96-5	Saw chain 10 set		1			
A05	782023-7	Wrench 13-16		1	*		
A05-1	782042-3	Box wrench 13	O	1			
E01	8039U0-8	Caution tag		1			
E02	8040V6-2	Sound label		1			
F01	191G96-5	Saw chain 10 set		1			
F02	191V92-3	Sprocket 9 set		1			
F04	195093-1	Chain oil set		1			
F05	195923-6	Round file 4.5 set		1	*		
F05-1	D-70954	FILE HOLDER SET 4.5MM(11/64")	O	1			
F06	198457-8	File set		1	*		
F06-1	D-70948	FILE HOLDER SET 4.0MM(5/32")	O	1			
F44	1910T9-4	Chain oil mineral set		1			
F45	1910U8-3	Chain oil mineral set		1			
F46	1910U5-9	Hydraulic oil HLP 46 set		1	*		
F47	1910U6-7	Corrosion protection oil set		1			
F48	199897-3	Oil vessel set		1			
G13	1911A1-3	Guide bar 10 set		1			