Model No.UB100D Cordless Blower

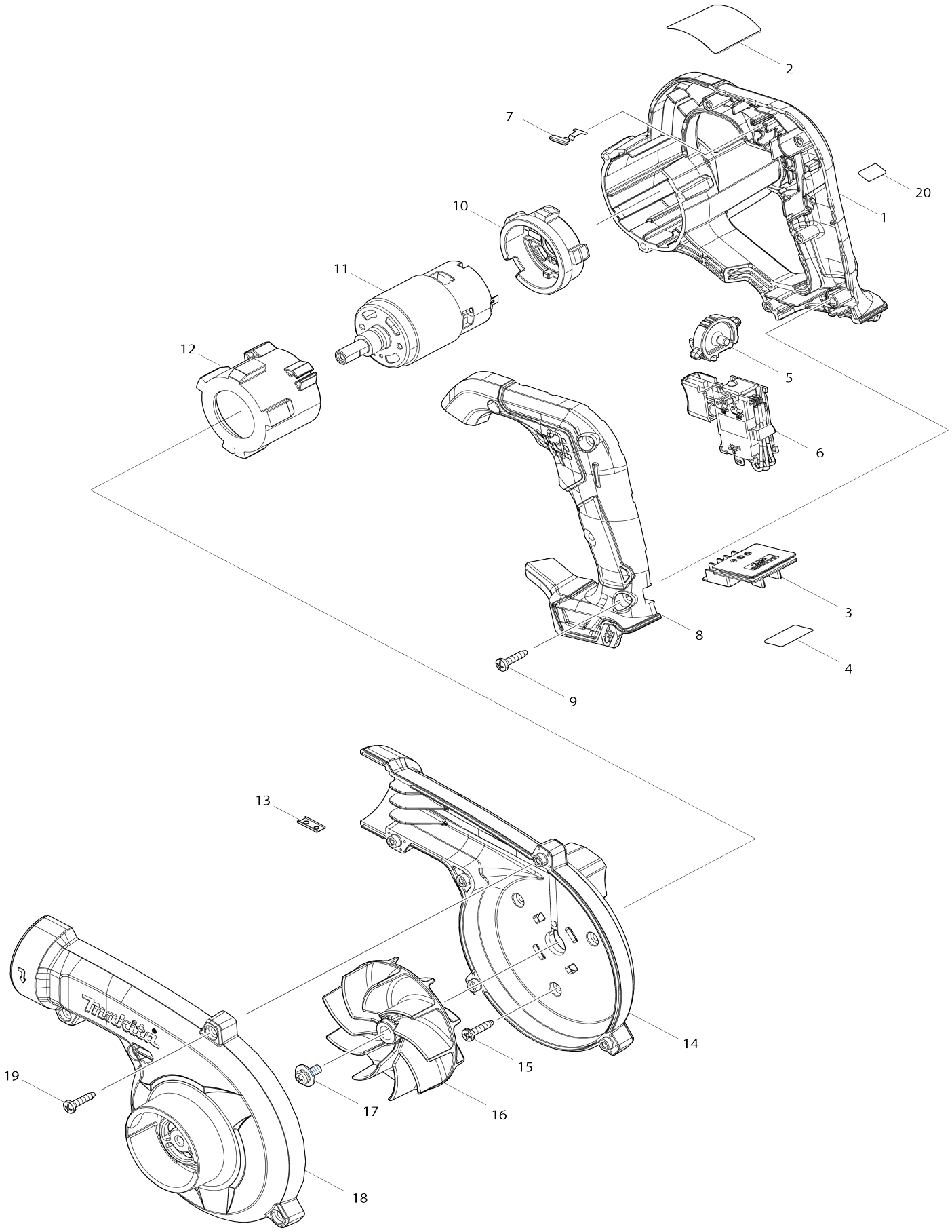

Model No.UB100D Cordless Blower

Item No.	Parts No.	Description	Interchangeability	Q'ty	New/ Old	Note1	Note2
001	183R73-7	Motor housing set		1			
001		INC. 8					
002	857R07-3	Name plate UB100D		1			
003	644813-5	Terminal		1			
004	857R14-6	Serial No. label UB100D		1			
005	412573-5	Dial		1			
006	632R61-6	Switch unit		1			
C10	688165-4	Line filter		1			
C20	654086-2	Receptacle 42486-2		2			
007	232620-4	Leaf spring		1			
008	183R73-7	Motor housing set		1			
008		INC. 1					
009	266326-2	Binding head tapping screw 4X18		5			
010	422589-2	Motor rubber ring B		1			
011	629A20-7	DC motor		1			
012	422588-4	Motor rubber ring A		1			
013	345998-7	Set plate		1			
014	183R77-9	Fan housing set		1	*		
C10	8012T7-9	Caution label		1	*		
014		INC. 18			*		
014-1	1833C1-3	FAN HOUSING SET	<	1			
C10	8101V9-2	CAUTION LABEL		1			
014-1		INC. 18					
015	266326-2	Binding head tapping screw 4X18		3			
016	240210-9	Fan 85		1			
017	265B25-5	Pan head screw M5X12 WG		1	*		
017-1	265E75-8	Pan head screw M5X12 WG	<	1			
018	183R77-9	Fan housing set		1	*		
C10	8012T7-9	Caution label		1	*		
018		INC. 14			*		
018-1	1833C1-3	FAN HOUSING SET	<	1			
C10	8101V9-2	CAUTION LABEL		1			
018-1		INC. 14					
019	266326-2	Binding head tapping screw 4X18		5			
020	8022C7-3	Sound 87dB label		1	*		
020-1	800A44-4	Sound 88dB label	<	1			
A01	123245-4	Nozzle assembly		1			
C10	454703-2	Joint		1			
A02	123241-2	Dust bag assembly		1			
C10	410602-8	Fastener		1			
F05	191M30-1	Brush nozzle set		1			
F06	191M32-7	Wiper nozzle set		1			
F07	191M34-3	Flexible hose set		1			
F08	192236-6	Anchor nozzle set		1			