Model No.UB001G Cordless Blower

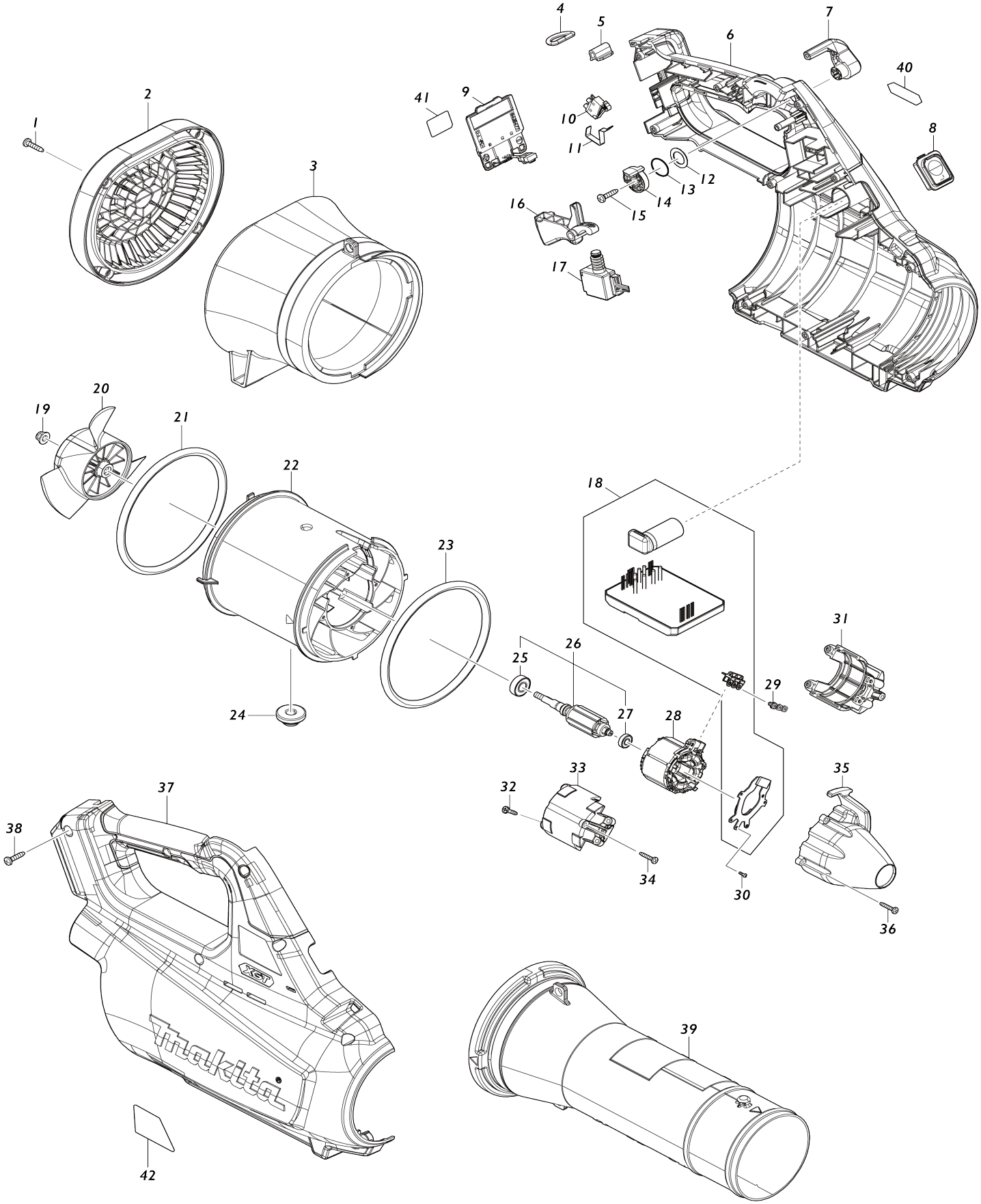

Model No.UB001G Cordless Blower

Item No.	Parts No.	Description	Interchangeability	Q'ty	New/ Old	Note1	Note2
001	266326-2	Binding head tapping screw 4X18		4			
002	413368-9	Rear cover		1	*		
003	140Y68-5	Rear housing complete		1	*		
C10	422668-6	Sponge		4	*		
003-1	122C63-5	Rear housing assembly	S	1			
C10	422668-6	Sponge		4			
003-1		INC. 1					
004	327742-4	D ring 20		1			
005	347783-4	Ring support		1			
006	183T07-2	Housing set		1	*		
C10	263005-3	Rubber pin 6		2	*		
C20	8011Y4-4	Caution label		1	*		
006		INC. 37			*		
006-1	1831D3-4	Housing set	O	1	*		
C10	263005-3	Rubber pin 6		2	*		
C20	8012T7-9	Caution label	O	1	*		
006-1		INC. 37			*		
006-2	1831R6-6	Housing set	S	1	*		
C10	263005-3	Rubber pin 6		2	*		
C20	8012T7-9	Caution label	O	1	*		
006-2		INC. 37			*		
006-3	1833B1-6	HOUSING SET	<	1	*		
C10	263005-3	Rubber pin 6		2	*		
C20	8101V4-2	CAUTION LABEL		1	*		
006-3		INC. 37			*		
006-4	1833C5-5	HOUSING SET	S	1			
C10	263005-3	Rubber pin 6		2			
C20	8109V5-8	CAUTION LABEL(SOUND)		1			
006-4		INC. 37					
007	412755-9	Control lever		1			
008	140X08-7	Switch circuit complete		1	*		
C10	810D46-0	Switch label		1	*		
009	632P65-6	Terminal unit		1			
010	632L48-2	Switch unit		1			
011	232634-3	Leaf spring		1			
012	253798-0	Flat washer 13		1			
013	213154-6	O-ring 14		1			
014	412754-1	Link		1			
015	266326-2	Binding head tapping screw 4X18		1			
016	412756-7	Switch lever		1			
017	651496-4	Switch C3JR-1AT-PAXD3		1			
018	620E14-9	Controller		1	*		
018-1	620R83-8	Controller	S	1			
019	252286-4	Collared hex. lock nut M5-8		1			
020	240177-1	Fan 110		1			
021	424721-4	Rubber ring 115		1			

022	413366-3	Fan housing		1			
023	424721-4	Rubber ring 115		1			
024	424194-1	Rubber ring 8		1			
025	210040-2	Ball bearing 698LLU		1			
026	519580-0	Rotor assembly		1			
026		INC. 25,27					
027	211157-4	Ball bearing 695ZZ		1			
028	629A49-3	Stator		1			
029	652069-6	Flat head screw M3X6		3			
030	266490-9	Pan head tapping screw 2X6		3			
031	183M64-8	Motor housing set		1			
031		INC. 33					
032	266130-9	Binding head tapping screw 3X16		4	*		
032-1	266429-2	Binding head tapping screw 3X16	O	4			
033	183M64-8	Motor housing set		1			
033		INC. 31					
034	266130-9	Binding head tapping screw 3X16		2	*		
034-1	266429-2	Binding head tapping screw 3X16	O	2			
035	413365-5	Cap		1			
036	266130-9	Binding head tapping screw 3X16		4	*		
036-1	266429-2	Binding head tapping screw 3X16	O	4			
037	183T07-2	Housing set		1	*		
C10	263005-3	Rubber pin 6		2	*		
C20	8011Y4-4	Caution label		1	*		
037		INC. 6			*		
037-1	1831D3-4	Housing set	O	1	*		
C10	263005-3	Rubber pin 6		2	*		
C20	8012T7-9	Caution label	O	1	*		
037-1		INC. 6			*		
037-2	1831R6-6	Housing set	S	1	*		
C10	263005-3	Rubber pin 6		2	*		
C20	8012T7-9	Caution label	O	1	*		
037-2		INC. 6			*		
037-3	1833B1-6	HOUSING SET	<	1	*		
C10	263005-3	Rubber pin 6		2	*		
C20	8101V4-2	CAUTION LABEL		1	*		
037-3		INC. 6			*		
037-4	1833C5-5	HOUSING SET	S	1			
C10	263005-3	Rubber pin 6		2			
C20	8109V5-8	CAUTION LABEL(SOUND)		1			
037-4		INC. 6					
038	266326-2	Binding head tapping screw 4X18		10			
039	413367-1	Front pipe		1			
040	8030S0-0	XGT logo label		1			
041	811D71-4	Serial No. label UB001G		1			
042	811D64-1	Name plate UB001G		1			
A01	166094-6	Shoulder belt		1	*		

A01-1	122J43-3	Band assembly	O	1			
C10	162E18-0	Cushion complete		1	*		
C20	162E17-2	Blower band		1	*		
A02	412758-3	End nozzle 80		1	*		
A02-1	191P97-7	End nozzle 80 set	O	1			
A03	191L96-5	Adapter pipe 85-72 set		1			
A04	183P97-1	Extension nozzle set		1	*		
A04-1	197888-8	Extension nozzle set	O	1			
A05	183P98-9	Flat nozzle set		1	*		
A05-1	197889-6	Flat nozzle set	O	1			
A06B	***DC40RA	DC40RA FAST CHARGER		1			
A06B		COMPO-PARTS					
A07B	412393-7	Battery cover		1	*		
A08B	191B26-6	Battery BL4040 set		1			
E01	8031T1-1	Sound label		1	*		
F02	191B03-8	Gutter nozzle set		1			
F03	191L96-5	Adapter pipe 85-72 set		1			
F05	197888-8	Extension nozzle set		1			
F06	197889-6	Flat nozzle set		1			
F08	1917G3-7	Harness cover set		1			

Please state Parts No. when your order.

Print Date 09/21/2026