Model No.TW008G CORDLESS IMPACT WRENCH

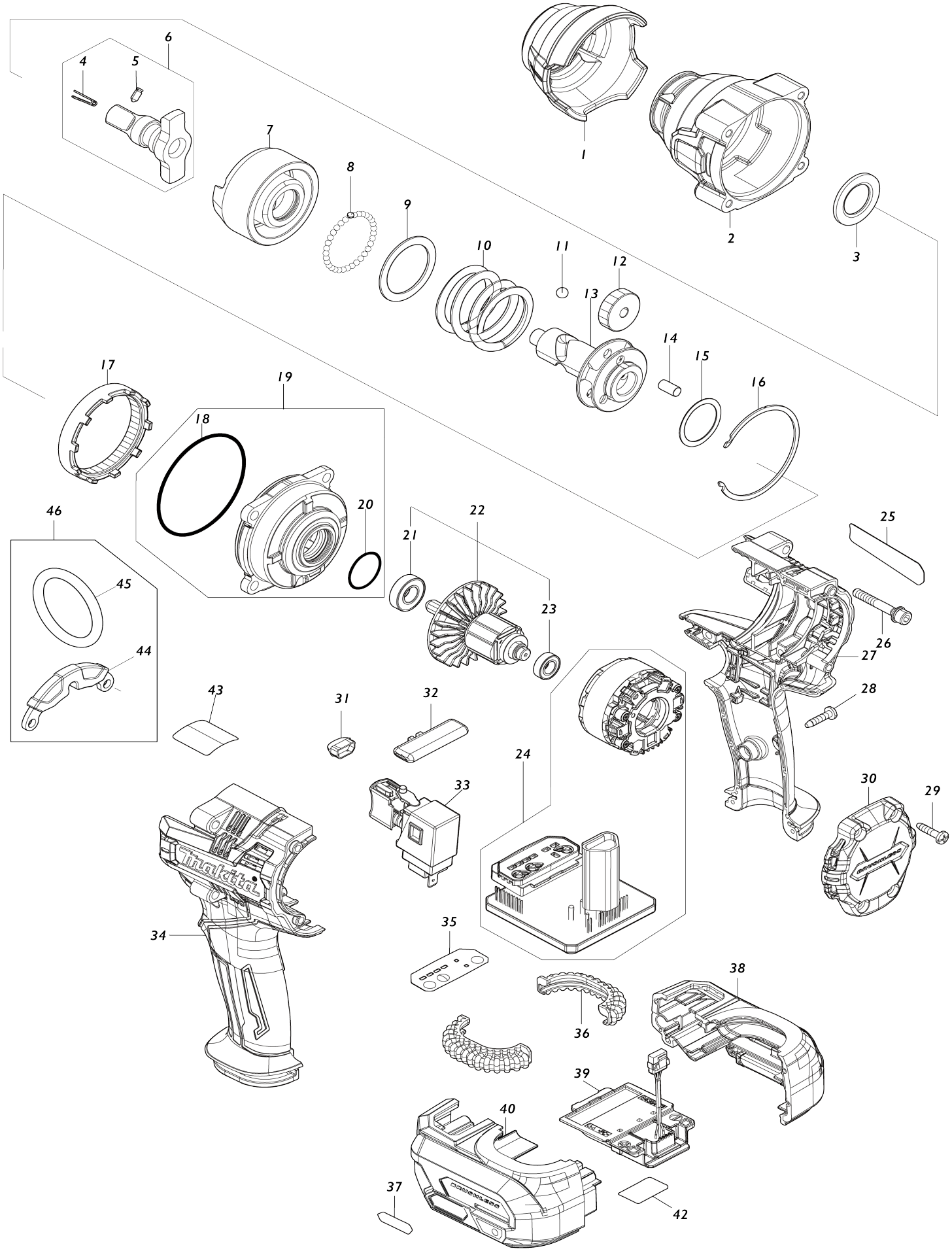

Model No.TW008G CORDLESS IMPACT WRENCH

Item No.	Parts No.	Description	Interchangeability	Q'ty	New/ Old	Note1	Note2
001	422709-8	BUMPER		1			
002	141A99-3	HAMMER CASE COMPLETE		1	*		
002-1	141U36-7	HAMMER CASE COMPLETE	<	1			
003	253481-9	FLAT WASHER 20		1			
004	322045-1	CLIP		1			
005	323675-1	PIN 4		1			
006	136411-4	ANVIL A ASSY		1			
006		INC. 4,5					
007	327804-8	HAMMER		1			
008	216001-0	STEEL BALL 3.5		33			
009	267340-1	FLAT WASHER 32		1			
010	232708-0	COMPRESSION SPRING 34		1			
011	216007-8	STEEL BALL 6.4		2			
012	227891-6	SPUR GEAR 28		3			
013	327805-6	SPINDLE		1			
014	256211-7	PIN 6		3			
015	267494-4	FLAT WASHER 25		1	*		
015-1	267127-1	FLAT WASHER 26	O	1			
016	347832-7	RETAINER		1			
017	227892-4	INTERNAL SPUR GEAR 65		1			
018	213709-7	O RING 63		1			
019	136420-3	INTERNAL GEAR CASE ASSY		1			
019		INC. 18,20					
020	213961-7	O RING 22		1			
021	210069-8	BALL BEARING 6900DDW		1			
022	519691-1	ROTOR ASSY		1			
022		INC. 21,23					
023	210261-6	BALL BEARING 688LLB		1			
024	629A72-8	STATOR COMPLETE		1			
025	811F67-7	TW008G NAME PLATE		1			
026	251476-6	H.S.H.BOLT M5X35 WITH WR		4	*		
026-1	265D13-4	H.S.H.BOLT M5X35 WITH WRM	<	4	*		
026-2	265E44-9	Hex. socket head bolt M5X35 WRM	<	4			
027	183S74-1	HOUSING SET		1			
027		INC. 34					
028	266326-2	TAPPING SCREW 4X18		7			
029	266326-2	TAPPING SCREW 4X18		4			
030	413602-7	REAR COVER		1			
031	620F48-8	LED CIRCUIT		1			
032	413603-5	F/R CHANGE LEVER		1			
033	140U03-9	SWITCH COMPLETE		1			
C10	424774-3	SWITCH COVER		1			
034	183S74-1	HOUSING SET		1			
034		INC. 27					
035	8012S9-8	SWITCH LABEL		1			
036	424773-5	CUSHION RUBBER		2	*		
036-1	422A56-3	CUSHION RUBBER	<	2			

037	8005T5-8	XGT LOGO LABEL		1			
038	183S77-5	BATTERY HOUSING SET		1			
C10	263005-3	RUBBER PIN 6		2			
C20	252126-6	HEX. LOCK NUT M4-7		2			
038		INC. 40					
039	632R99-1	TERMINAL UNIT		1	*		
039-1	632W78-9	TERMINAL UNIT	<	1			
040	183S77-5	BATTERY HOUSING SET		1			
C10	263005-3	RUBBER PIN 6		2			
C20	252126-6	HEX. LOCK NUT M4-7		2			
040		INC. 38					
042	811F72-4	TW008G SERIAL NO. LABEL		1			
A01	251314-2	+ TRUSS HEAD SCREW M4X12		1			
A02	346949-3	HOOK		1			
A03	821551-8	CONNECTOR PLASTIC CASE (TYPE3)		1			
C10	453974-8	LATCH		4			
A04	835K85-1	INNER TRAY		1			
A05B	8033G9-6	TW008GD201 INDICATION LABEL		1			
A06B	8033H0-1	TW008GD201 PLASTIC CASE LABEL		2			
A07B	412393-7	BATTERY COVER		1			
A07C	412393-7	BATTERY COVER		2	*		
A07-1C	412393-7	BATTERY COVER	<	1			
A08	***DC40RA	DC40RA FAST CHARGER		1			
A08		COMPO-PARTS					
A09B	191B36-3	BATTERY BL4025 SET		2			
A09C	191B26-6	BATTERY BL4040 SET		2			
F01	191G67-2	EXTENSION HANDLE SET		1			