Model No.TW005G Cordless Impact Wrench

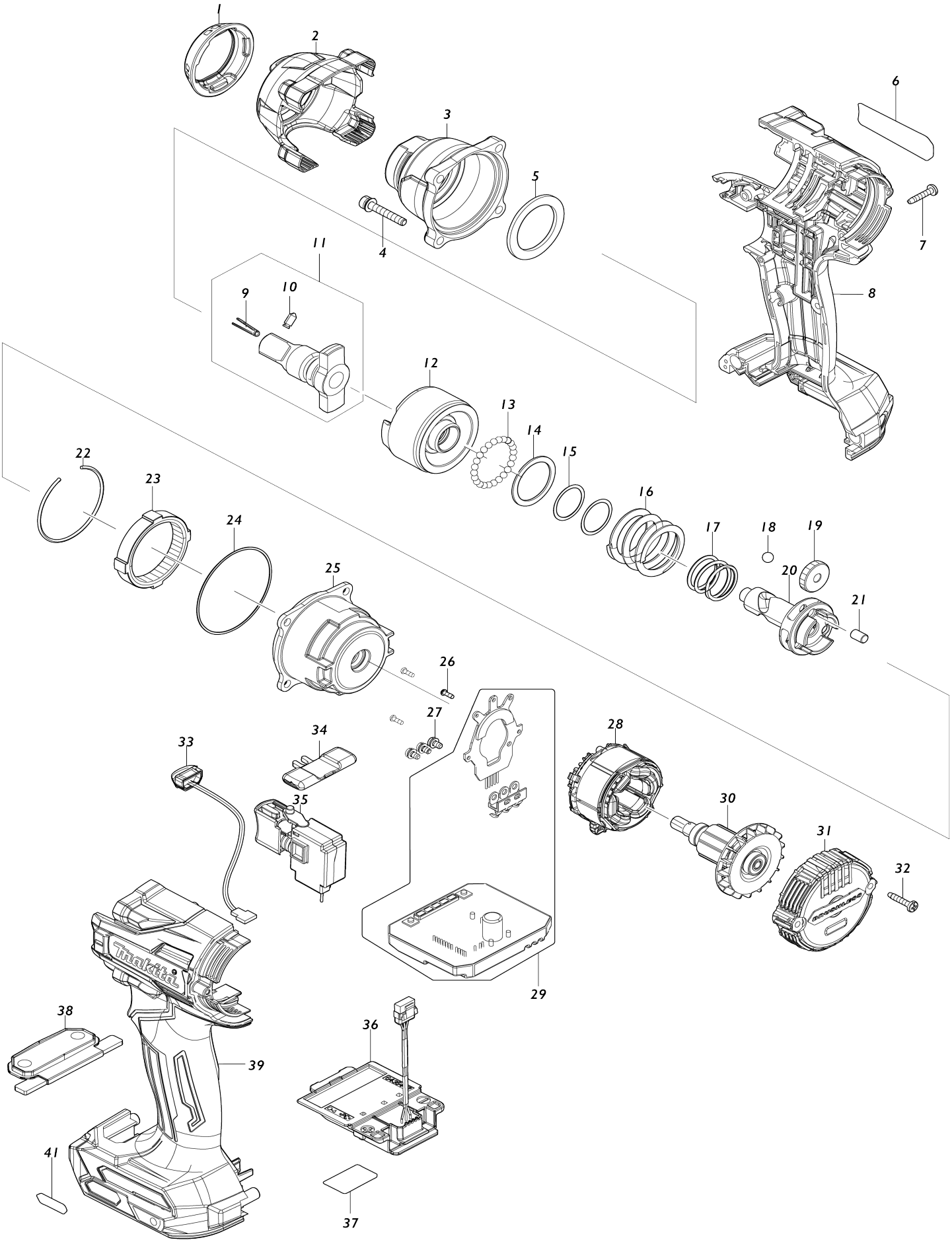

Model No.TW005G Cordless Impact Wrench

Item No.	Parts No.	Description	Interchangeability	Q'ty	New/ Old	Note1	Note2
001	422584-2	Bumper		1			
002	412822-0	Hammer case cover		1			
003	140W13-8	Hammer case complete		1	*		
003-1	1410F8-8	Hammer case complete	O	1			
004	265472-8	Hex. socket head bolt M4X25		4	*		
004-1	265D40-1	Hex. socket head bolt M4X25 WR	O	4	*		
004-2	265472-8	Hex. socket head bolt M4X25	O	4			
005	261154-0	Nylon washer 28		1			
006	857P28-3	Name plate TW005G		1			
007	266130-9	Binding head tapping screw 3X16		8			
008	183R16-9	Housing set		1			
C10	263005-3	Rubber pin 6		2			
C20	263032-0	Rubber pin 4		2			
C30	252126-6	Hex. lock nut M4-7		2			
008		INC. 39					
009	322045-1	Clip		1			
010	323675-1	Pin 4		1	*		
010-1	327D10-9	Pin 4	O	1	*		
010-2	323675-1	Pin 4	O	1			
011	136271-4	Anvil A assembly		1	*		
011		INC. 9,10			*		
011-1	136358-2	Anvil A assembly	<	1	*		
011-1		INC. 9,10			*		
011-2	136804-5	Anvil A assembly	<	1			
011-2		INC. 9,10					
012	327648-6	Hammer		1			
013	216001-0	Steel ball 3.5		24	*		
013-1	216019-1	Steel ball 3	S	28			
014	267175-0	Flat washer 24		1			
015	253343-1	Thin washer 18		2	*		
015-1	267106-9	Flat washer 18	<	1			
016	232615-7	Compression spring 25		1	*		
016-1	232910-5	Compression spring 25	S	1			
017	232637-7	Compression spring 18		1	*		
017-1	232682-2	Compression spring 18	<	1			
018	216011-7	Steel ball 5.6		2			
019	227338-0	Spur gear 22		3			
020	327573-1	Spindle		1	*		
020-1	327689-2	Spindle	<	1			
021	268311-1	Pin 5		3			
022	233910-8	Ring spring 43		1			
023	227337-2	Internal gear 51		1			
024	213785-1	O-ring 49		1			
025	140W14-6	Internal gear case complete		1			
026	266490-9	Pan head tapping screw 2X6		3			
027	652069-6	Flat head screw M3X6		3			
028	629A13-4	Stator		1			

029	620D69-8	Controller		1			
030	619626-3	Rotor		1			
031	412821-2	Rear cover		1			
032	266130-9	Binding head tapping screw 3X16		2			
033	620521-2	LED circuit		1			
034	455053-8	F/R change lever		1			
035	651442-7	Switch C3JR-1A-1		1			
036	632P49-4	Terminal unit		1	*		
036-1	632W77-1	Terminal unit	<	1			
037	857P33-0	Serial No. label TW005G		1			
038	140W19-6	Switch plate complete		1			
C10	8020J3-8	Switch label		1			
039	183R16-9	Housing set		1			
C10	263005-3	Rubber pin 6		2			
C20	263032-0	Rubber pin 4		2			
C30	252126-6	Hex. lock nut M4-7		2			
039		INC. 8					
041	8007R2-2	XGT logo label		1			
A01	266622-8	Truss head screw M4X12		1			
A02	346317-0	Hook		1			
A03B	412393-7	Battery cover		1			
A04B	191B36-3	Battery BL4025 set		2			
A05B	***DC40RA	DC40RA FAST CHARGER		1			
A05B		COMPO-PARTS					
A06B	821550-0	Connector plastic case (type 2)		1			
C10	453974-8	Latch		4			
A07B	8021N8-2	Plastic case label TW005GD201		2			
A08B	8021N7-4	Indication label TW005GD201		1			
A09B	835R29-3	Inner tray		1			
F01-1	191K57-9	Tool hanger set	<	1			
F02	194485-1	Shoulder pin 4 set		1			