Model No.TW002G Cordless Impact Wrench

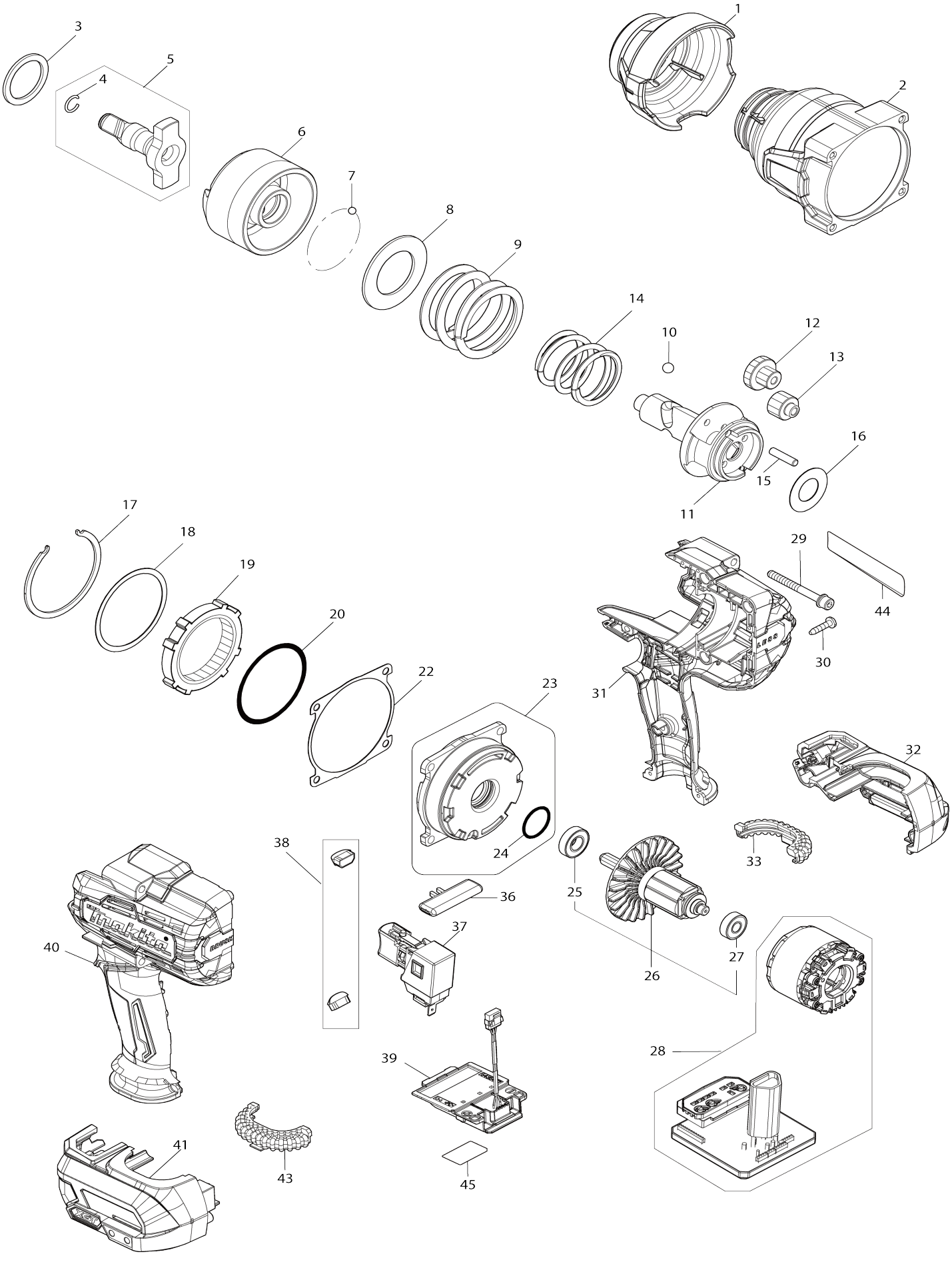

Model No.TW002G Cordless Impact Wrench

Item No.	Parts No.	Description	Interchangeability	Q'ty	New/ Old	Note1	Note2
001	422594-9	Bumper		1			
002	141V80-0	Hammer case complete		1			
003	267250-2	Flat washer 30		1			
004	232323-0	Ring spring 10		1			
005	137152-5	Anvil W assembly		1			
005		INC. 4					
006	327D63-8	Hammer		1			
007	216002-8	Steel ball 4.8		27			
008	253604-9	Flat washer 35		1			
009	232869-6	Compression spring 46		1			
010	216009-4	Steel ball 7.1		2			
011	327D62-0	Spindle		1			
012	226990-1	Spur gear 11-22		2			
013	227935-2	Spur gear 15		2			
014	232870-1	Compression spring 34		1			
015	268238-5	Pin 5		4			
016	267235-8	Flat washer 18		1			
017	346947-7	Retainer		1			
018	253479-6	Flat washer 57		1	*		
019	226991-9	Internal gear 50		1			
020	213663-5	O-ring 55		1			
022	422595-7	Gasket		1			
023	136279-8	Internal gear case assembly		1	*		
023		INC. 24			*		
023-1	137326-8	Internal gear case assembly	S	1			
023-1		INC. 24					
024	213961-7	O-ring 22		1			
025	210069-8	Ball bearing 6900DDW		1			
026	510604-5	Rotor assembly		1			
026		INC. 25,27					
027	210169-4	Ball bearing 607LLB		1			
028	520195-8	Stator assembly 36V		1	*		
C10	8012S9-8	Switch label		1	*		
028-1	520223-9	STATOR ASSY 36V	S	1			
C10	8012S9-8	Switch label		1			
029	265B38-6	Hex. socket head bolt M5X50 WRM		4			
030	265995-6	Binding head tapping screw 4X18		9	*		
030-1	265E16-4	Tapping screw 4X18	<	9			
031	1830R8-6	Housing set		1	*		
031		INC. 40			*		
031-1	1831B9-8	Housing set	<	1	*		
031-1		INC. 40			*		
031-2	1830R8-6	Housing set	S	1			
031-2		INC. 40					
032	183S33-5	Battery housing set		1			
C10	263005-3	Rubber pin 6		2			

C20	252126-6	Hex. lock nut M4-7		4			
032		INC. 41					
033	422A55-5	Cushion rubber		1			
036	456268-0	F/R change lever		1			
037	141V82-6	Switch complete		1			
C10	424774-3	Switch cover		1			
038	620N85-0	LED circuit		1			
039	632P49-4	Terminal unit		1	*		
039-1	632W77-1	Terminal unit	<	1			
040	1830R8-6	Housing set		1	*		
040		INC. 31			*		
040-1	1831B9-8	Housing set	<	1	*		
040-1		INC. 31			*		
040-2	1830R8-6	Housing set	S	1			
040-2		INC. 31					
041	183S33-5	Battery housing set		1			
C10	263005-3	Rubber pin 6		2			
C20	252126-6	Hex. lock nut M4-7		4			
041		INC. 32					
043	422A55-5	Cushion rubber		1			
044	8145L6-4	Name plate TW002G		1			
045	8145L8-0	Serial No. label TW002G		1			
A01	251314-2	Truss head screw M4X12		2			
A02	346949-3	Hook		1			
A03B	821551-8	Connector plastic case (type 3)		1			
C10	453974-8	Latch		4			
A04B	835K85-1	Inner tray		1			
A05B	***DC40RA	DC40RA FAST CHARGER		1			
A05B		COMPO-PARTS					
A06B	412393-7	Battery cover		2			
A07B	191B26-6	Battery BL4040 set		2			
F01	191G67-2	Extension handle set		1			