Model No.TW001G Cordless Impact Wrench

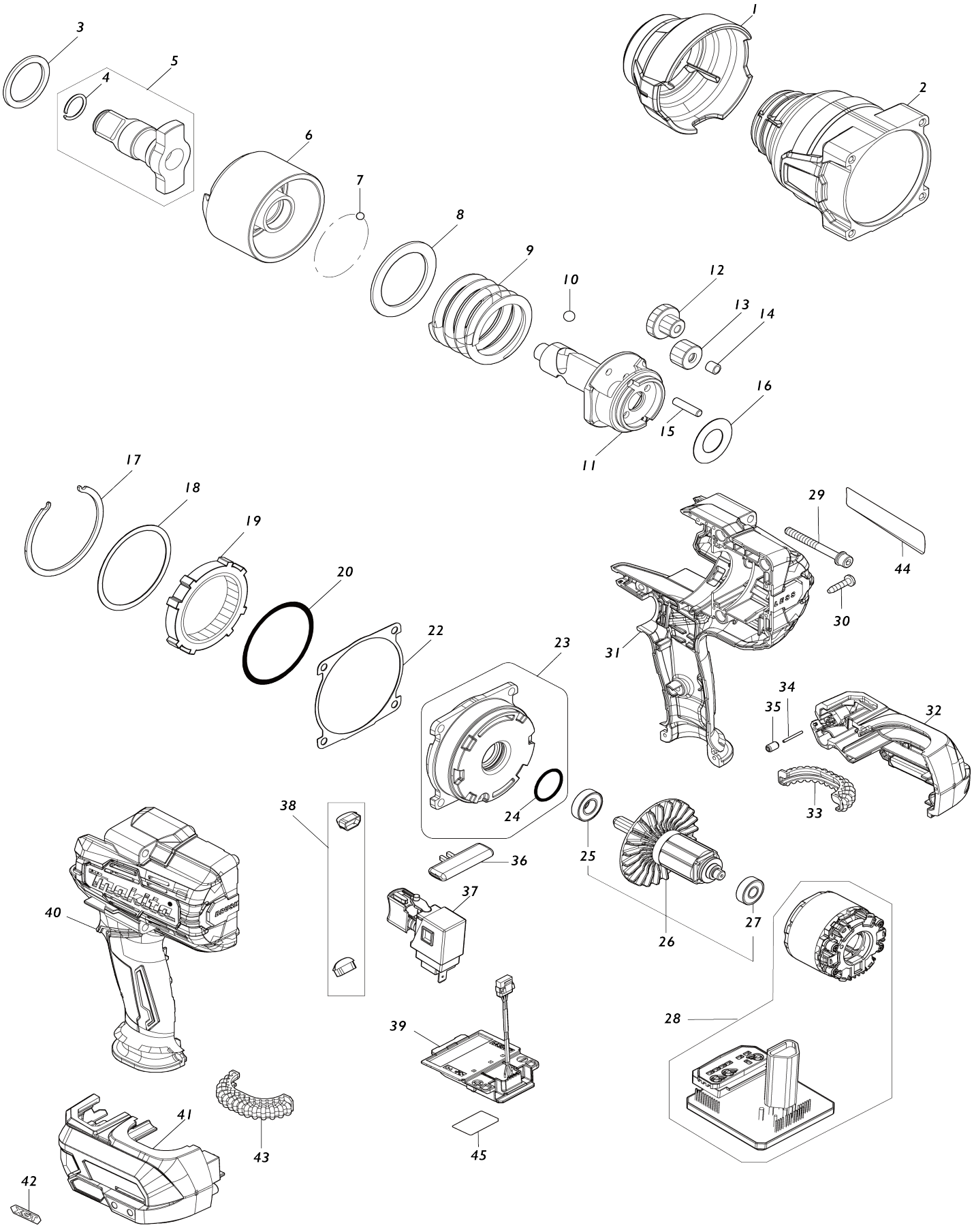

Model No.TW001G Cordless Impact Wrench

Item No.	Parts No.	Description	Interchangeability	Q'ty	New/ Old	Note1	Note2
001	422594-9	Bumper		1			
002	140T99-4	Hammer case complete		1			
003	267250-2	Flat washer 30		1			
004	232334-5	Ring spring 16		1			
005	136249-7	Anvil E assembly		1			
005		INC. 4					
006	327595-1	Hammer		1			
007	216002-8	Steel ball 4.8		30			
008	253478-8	Flat washer 41		1			
009	232623-8	Compression spring 41		1			
010	216009-4	Steel ball 7.1		2			
011	327594-3	Spindle		1			
012	226990-1	Spur gear 11-22		2			
013	226989-6	Spur gear 15		2	*		
013-1	227935-2	Spur gear 15	S	2			
013-1C	227935-2	Spur gear 15		2			
014	257539-6	Sleeve 5		2	*		
015	268238-5	Pin 5		4			
016	267235-8	Flat washer 18		1			
017	346947-7	Retainer		1			
018	253479-6	Flat washer 57		1	*		
019	226991-9	Internal gear 50		1			
020	213663-5	O-ring 55		1			
022	422595-7	Gasket		1			
023	136279-8	Internal gear case assembly		1	*		
023		INC. 24			*		
023-1	137326-8	Internal gear case assembly	S	1			
023-1		INC. 24					
023-1C	137326-8	Internal gear case assembly		1			
023-1C		INC. 24					
024	213961-7	O-ring 22		1			
025	210069-8	Ball bearing 6900DDW		1			
026	519630-1	Rotor assembly		1	*		
026		INC. 25,27			*		
026-1	510604-5	Rotor assembly	O	1	*		
026-1		INC. 25,27			*		
026-1C	510604-5	Rotor assembly		1			
026-1C		INC. 25,27					
026-2	510608-7	Rotor assembly	O	1			
026-2		INC. 25,27					
027	211022-7	Ball bearing 607ZZ		1	*		
027-1	210169-4	Ball bearing 607LLB	O	1			
027-1C	210169-4	Ball bearing 607LLB		1			

028	629A16-8	Stator unit		1	*		
C10	8012S9-8	Switch label		1	*		
028-1	629D74-2	Stator unit	S	1			
C10	8012S9-8	Switch label		1			
029	265B38-6	Hex. socket head bolt M5X50 WR M		4			
030	266326-2	Binding head tapping screw 4X18		9	*		
030-1	265995-6	Binding head tapping screw 4X18	O	9	*		
030-2	265E16-4	Tapping screw 4X18	O	9			
030-2C	265E16-4	Tapping screw 4X18		9			
031	183P61-2	Housing set		1	*		
031		INC. 40			*		
031-1	183V83-8	Housing set	<	1	*		
031-1		INC. 40			*		
031-2	1830R8-6	Housing set	<	1			
031-2		INC. 40					
031-2C	1830R8-6	Housing set		1			
031-2C		INC. 40					
032	183P62-0	Battery housing set		1	*		
C10	263005-3	Rubber pin 6		2	*		
C20	252126-6	Hex. lock nut M4-7		4	*		
032		INC. 41			*		
032-1	183S33-5	Battery housing set	S	1			
C10	263005-3	Rubber pin 6		2			
C20	252126-6	Hex. lock nut M4-7		4			
032-1		INC. 41					
032-1C	183S33-5	Battery housing set		1			
C10	263005-3	Rubber pin 6		2			
C20	252126-6	Hex. lock nut M4-7		4			
032-1C		INC. 41					
033	424773-5	Cushion rubber		1	*		
033-1	422810-9	Cushion rubber	<	1	*		
033-2	422A55-5	Cushion rubber	<	1			
033-2C	422A55-5	Cushion rubber		1			
034	268284-8	Pin 1.5		1	*		
035	263036-2	Rubber pin 5		1	*		
036	456268-0	F/R change lever		1			
037	140U03-9	Switch complete		1	*		
C10	424774-3	Switch cover		1	*		
037-1	141V82-6	Switch complete	S	1			
C10	424774-3	Switch cover		1			
038	620D09-6	LED circuit		1			
039	632P49-4	Terminal unit		1	*		
039-1	632W77-1	Terminal unit	<	1			
039-1C	632W77-1	Terminal unit		1			
040	183P61-2	Housing set		1	*		

040		INC. 31			*		
040-1	183V83-8	Housing set	<	1	*		
040-1		INC. 31			*		
040-2	1830R8-6	Housing set	<	1			
040-2		INC. 31					
040-2C	1830R8-6	Housing set		1			
040-2C		INC. 31					
041	183P62-0	Battery housing set		1	*		
C10	263005-3	Rubber pin 6		2	*		
C20	252126-6	Hex. lock nut M4-7		4	*		
041		INC. 32			*		
041-1	183S33-5	Battery housing set	S	1			
C10	263005-3	Rubber pin 6		2			
C20	252126-6	Hex. lock nut M4-7		4			
041-1		INC. 32					
041-1C	183S33-5	Battery housing set		1			
C10	263005-3	Rubber pin 6		2			
C20	252126-6	Hex. lock nut M4-7		4			
041-1C		INC. 32					
042	8005T5-8	XGT logo label		1	*		
043	424773-5	Cushion rubber		1	*		
043-1	422810-9	Cushion rubber	<	1	*		
043-2	422A55-5	Cushion rubber	<	1			
043-2C	422A55-5	Cushion rubber		1			
044	857G20-5	Name plate TW001G		1			
045	857G27-1	Serial No. label TW001G		1			
A01	251314-2	Truss head screw M4X12		2			
A02	346949-3	Hook		1			
A03	412393-7	Battery cover		2			
A04	***DC40RA	DC40RA FAST CHARGER		1			
A04		COMPO-PARTS					
A05B	191B26-6	Battery BL4040 set		2			
A05C	1917Y6-7	Battery BL4040F set		2			
A06	821551-8	Connector plastic case (type 3)		1			
C10	453974-8	Latch		4			
A07	835K85-1	Inner tray		1			
F01	191M83-0	Ring set		1			
F03	191G67-2	Extension handle set		1			