Model No.TD0101F IMPACT DRIVER

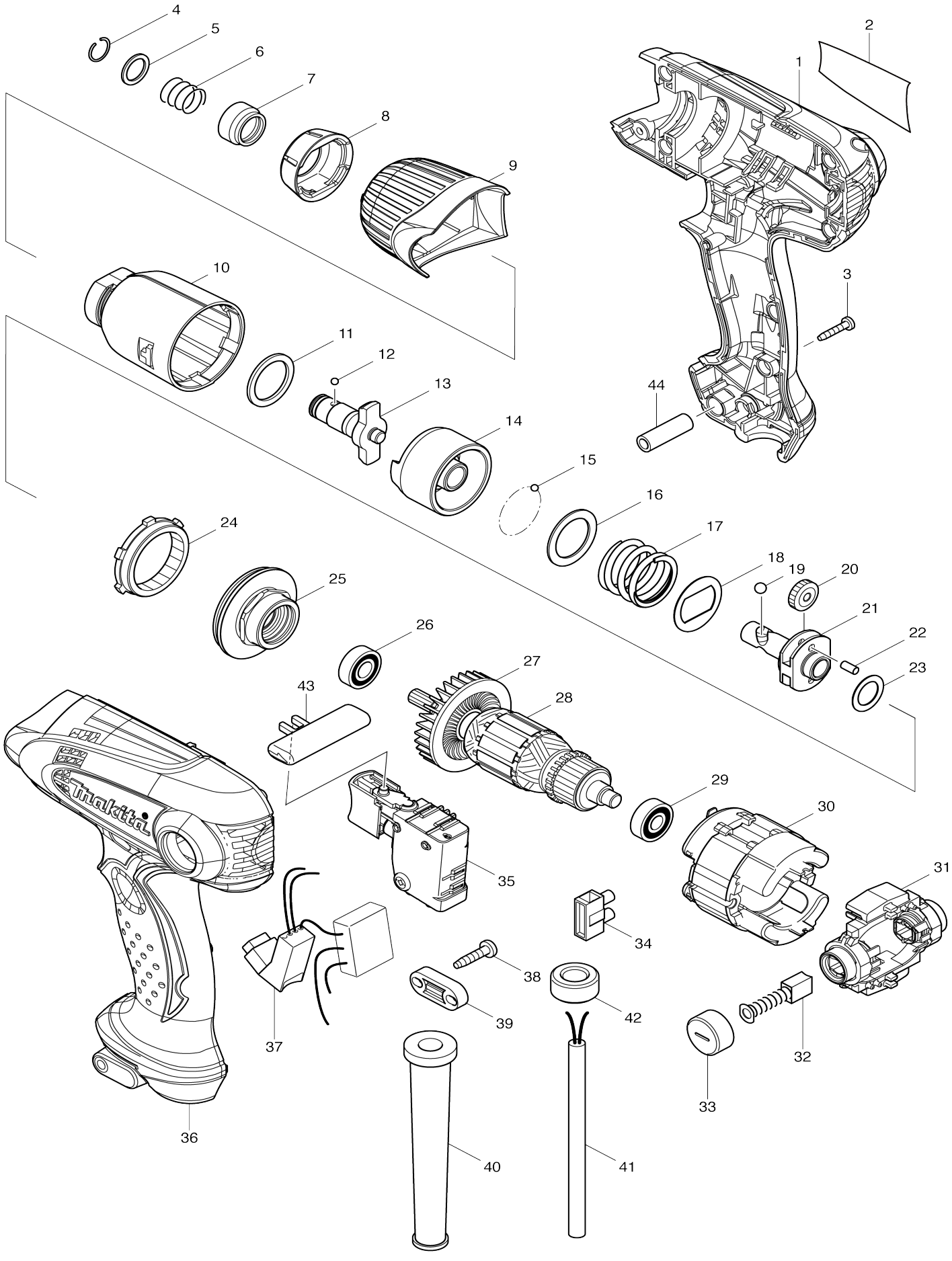

Model No.TD0101F IMPACT DRIVER

Item No.	Parts No.	Description	Interchangeability	Q'ty	New/ Old	Note1	Note2
001	188664-1	HOUSING SET		1			
C10	263002-9	RUBBER PIN 4		4			
001		INC. 36					
002	866417-5	TD0101F NAME PLATE		1			
003	266429-2	TAPPING SCREW 3X16		8			
004	231965-7	RING SPRING 10		1			
005	267143-3	FLAT WASHER 11		1			
006	233005-7	COMPRESSION SPRING 13		1			
007	324711-6	BIT SLEEVE		1			
008	424184-4	BUMPER		1	*		
008-1	424376-5	BUMPER	S	1			
009	450976-5	HAMMER CASE COVER		1	*		
009-1	452440-2	HAMMER CASE COVER	S	1			
010	158898-0	HAMMER CASE COMPLETE		1			
C10	213166-9	O RING 12.5		1			
C20	253798-0	FLAT WASHER 13		1			
C30	257776-2	SLEEVE 12		1			
011	261140-1	NYLON WASHER 20		1			
012	216019-1	STEEL BALL 3		2			
013	325619-7	ANVIL M		1	*		
013-1	326630-2	ANVIL M	O	1			
014	324894-2	HAMMER		1			
015	216019-1	STEEL BALL 3		24			
016	267380-9	FLAT WASHER 20		1			
017	234096-1	COMPRESSION SPRING 21		1			
018	267813-4	WASHER 21		1			
019	216002-8	STEEL BALL 4.8		2			
020	227213-0	SPUR GEAR 17		2			
021	324897-6	SPINDLE		1			
022	268217-3	PIN 3.5		2			
023	253052-2	FLAT WASHER 12		1			
024	227215-6	INTERNAL GEAR 43		1			
025	158899-8	BEARING BOX COMPLETE		1			
C10	210112-3	BALL BEARING 6801LLB		1	*		
C11	210242-0	BALL BEARING 6801LLB	O	1			
C20	213325-5	O RING 19		1			
026	210013-5	BALL BEARING 698VV		1			
027	240046-6	FAN 46		1			
028	517659-1	ARMATURE ASS'Y 240V		1			
028		INC. 26,27,29					
029	210062-2	BALL BEARING 607ZZ		1			
030	635109-5	FIELD 240V		1			
031	638643-4	HOLDER ARM COMPLETE		1			
C10	643981-1	BRUSH HOLDER 6X9		2			
032	191940-4	CARBON BRUSH CB-411		1	*		
032-1	195010-1	CARBON BRUSH SET CB-411	O	1			
033	643928-5	BRUSH HOLDER CAP		2			

034	654532-5	TERMINAL BLOCK 1P		1			
035	650613-3	SWITCH C3TA		1			
036	188664-1	HOUSING SET		1			
C10	263002-9	RUBBER PIN 4		4			
036		INC. 1					
037	631873-6	LIGHT CIRCUIT		1			
038	266326-2	TAPPING SCREW 4X18		2			
039	687124-5	STRAIN RELIEF		1			
040	682566-8	CORD GUARD 10		1			
041	665865-3	POWER SUPPLY CORD 1.0-2-2.5		1			
043	419250-0	F/R CHANGE LEVER		1			
044	262560-2	SLEEVE 5		1			
A01	784244-7	+ BIT 2-50		1			
F02	194281-7	STOPPER SET (W/BITS)		1			
F25	194251-6	KEYLESS DRILL CHUCK		1			

Please state Parts No. when your order.

Print Date 17/10/2024