Model No.ST113D Cordless Stapler

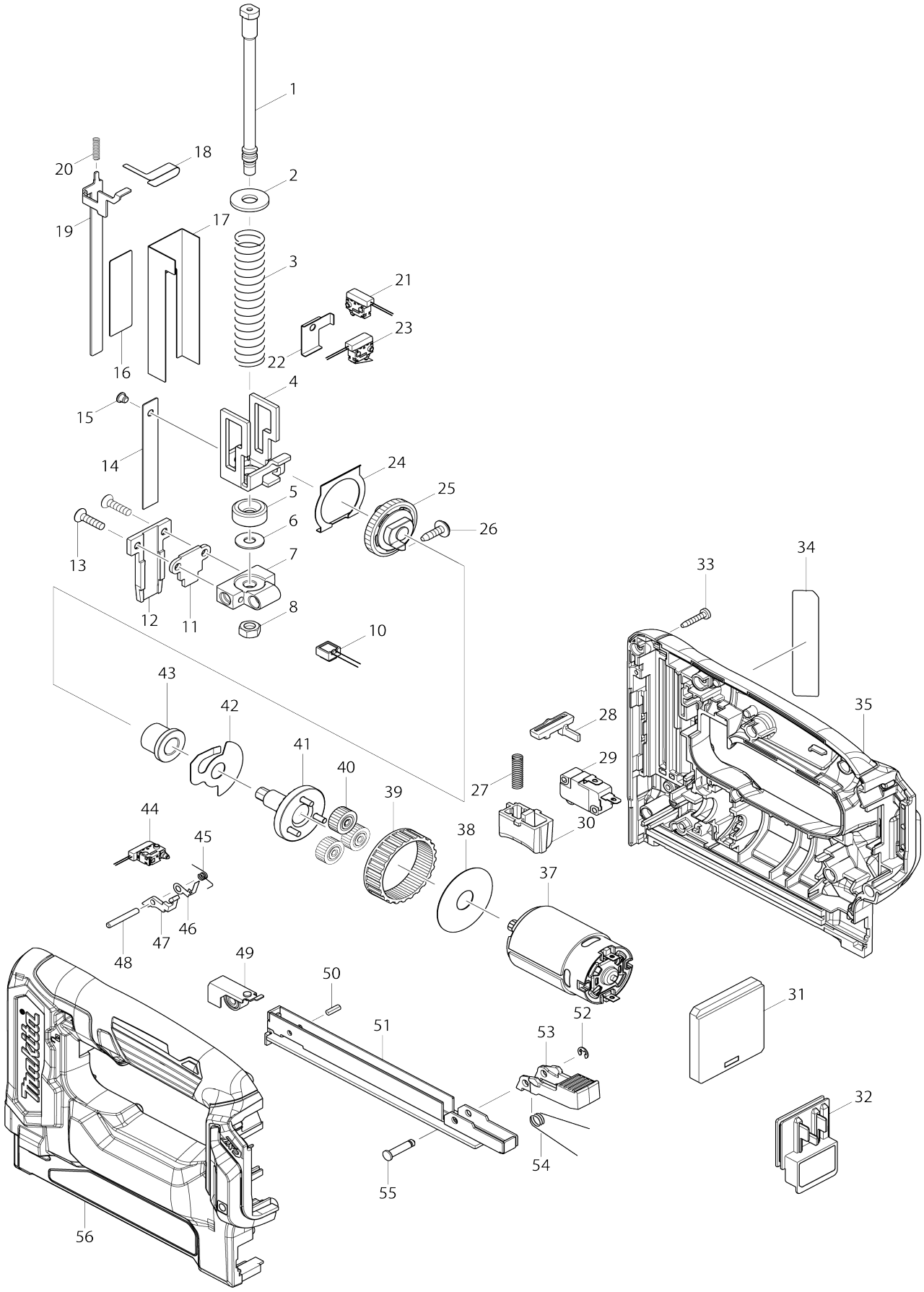

Model No.ST113D Cordless Stapler

Item No.	Parts No.	Description	Interchangeability	Q'ty	New/ Old	Note1	Note2
001	326731-6	Guide bolt		1			
002	253762-1	Flat washer 8		1			
003	232297-5	Compression spring 13		1			
004	347023-0	Hammer		1			
005	424099-5	Cushion		1			
006	253804-1	Flat washer 6		1			
007	319425-0	Holder		1	*		
007-1	319425-0	Holder	O	1			
008	931302-2	Hex. nut M6		1			
010	620507-6	LED circuit		1			
011	347037-9	Set plate		1			
012	326738-2	Driver guide		1			
013	251487-1	Hex. socket countersunk head screw M4X16		2			
014	347034-5	Driver		1			
015	256318-9	Flat fillister HD. pin 4		1			
016	347038-7	Upper plate		1			
017	347036-1	Guide plate		1			
018	232300-2	Leaf spring		1			
019	347042-6	Contact arm		1	*		
019-1	347316-5	Contact arm	<	1			
020	232337-9	Compression spring 3		1	*		
020-1	232997-7	Compression spring 3	<	1			
021	632G60-2	Switch unit		1			
022	347121-0	Slide plate		1			
023	632G61-0	Switch unit		1			
024	347040-0	Gear plate		1			
025	143770-9	Spur gear 43 complete		1			
026	266901-4	Binding head tapping screw 4X14		1			
027	232299-1	Compression spring 5		1			
028	456799-9	Trigger lock		1			
029	632J09-0	Switch unit		1	*		
029-1	632M82-8	Switch unit	<	1			
030	457303-7	Trigger		1			
031	620598-7	Controller		1			
032	644813-5	Terminal		1			
033	266130-9	Binding head tapping screw 3X16		10			
034	852U41-6	Name plate ST113D		1	*		
034-1	852U40-8	Name plate ST113D	<	1			
035	183F23-0	Housing set		1	*		
C10	263002-9	Rubber pin 4		2	*		
C20	252126-6	Hex. lock nut M4-7		2	*		
035		INC. 56			*		
035-1	1832T4-0	HOUSING SET	O	1			
C10	263002-9	Rubber pin 4		2			
C20	252126-6	Hex. lock nut M4-7		2			

C30	8046G1-3	CAUTION LABEL		1			
035-1		INC. 56					
037	629240-7	DC motor		1			
038	267053-4	Flat washer 12		1			
039	227166-3	Internal gear 69		1			
040	221961-3	Spur gear 27		3			
041	143777-5	Spur gear 7 complete		1			
042	345773-1	Anti back plate		1			
043	214059-3	Plane bearing 10		1			
044	632G60-2	Switch unit		1			
045	232298-3	Torsion spring 3		1			
046	347041-8	Slip plate		1			
047	456796-5	Switch plate		1			
048	256221-4	Pin 3		1			
049	143780-6	Spiral spring complete		1			
050	951051-5	Spring pin 3-8		1			
051	161467-8	Sub magazine		1			
052	961017-7	Stop ring (EXT) E-3		1			
053	456798-1	Lever		1			
054	232301-0	Torsion spring 7		1			
055	268029-4	Flat fillister HD. pin 4		1			
056	183F23-0	Housing set		1	*		
C10	263002-9	Rubber pin 4		2	*		
C20	252126-6	Hex. lock nut M4-7		2	*		
056		INC. 35			*		
056-1	1832T4-0	HOUSING SET	O	1			
C10	263002-9	Rubber pin 4		2			
C20	252126-6	Hex. lock nut M4-7		2			
C30	8046G1-3	CAUTION LABEL		1			
056-1		INC. 35					
A01	195246-2	Safety goggle set		1	*		
A02	266622-8	Truss head screw M4X12		1	*		
A02-1	251314-2	Truss head screw M4X12	O	1			
A03	346909-5	Hook		1			
A04	821549-5	Connector plastic case (type 1)		1			
C10	453974-8	Latch		4			
A05	839019-0	Inner tray		1			
A06B	810X11-9	Indication label ST113DWMJ		1	*		
A06C	810X02-0	Indication label ST113DY1J		1			
A06D	810X14-3	Indication label ST113DSAJ		1	*		
A06E	810X16-9	Indication label ST113DSMJ		1			
A06-1B	810X10-1	Indication label ST113DWMJ	<	1			
A06-1D	810X13-5	Indication label ST113DSAJ	<	1			
A07B	810X12-7	Plastic case label ST113DWMJ		2			
A07C	810X03-8	Plastic case label ST113DY1J		2			
A07D	810X15-1	Plastic case label ST113DSAJ		2			
A07E	810X17-7	Plastic case label ST113DSMJ		2			
A08	456128-6	Battery cover		1			
A09B	***DC10WC	DC10WC BATTERY CHARGER		1	*		
A09B		COMPO-PARTS			*		

A09	***DC10SA	DC10SA BATTERY CHARGER		1	*		
A09		COMPO-PARTS			*		
A09-1B	***DC10WD	DC10WD BATTERY CHARGER	<	1			
A09-1B		COMPO-PARTS					
A09-1	***DC10SB	DC10SB BATTERY CHARGER	<	1			
A09-1		COMPO-PARTS					
A10	197402-0	Battery BL1040B set		2	*		
A10C	197390-1	Battery BL1015 set		1	*		
A10D	197394-3	Battery BL1020B set		2	*		
A10-1	197406-2	Battery BL1041B set	<	2	*		
A10-1C	197393-5	Battery BL1016 set	<	1			
A10-1D	197396-9	Battery BL1021B set	<	2	*		
A10-2	197406-2	Battery BL1041B set	O	2			
A10-2D	197396-9	Battery BL1021B set	O	2			
F01	197731-1	Adjuster set		1			
F05	198968-3	Battery BL1016 set		1	*		
F06	198969-1	Battery BL1016 set (2 pcs)		1	*		
F07-1	198970-6	Battery BL1021B set (2 pcs)	O	1	*		
F08-1	199002-2	Battery BL1041B set (2 pcs)	O	1	*		
F40	347C56-3	Hook		1			