Model No.SN001G Cordless Snow Blower

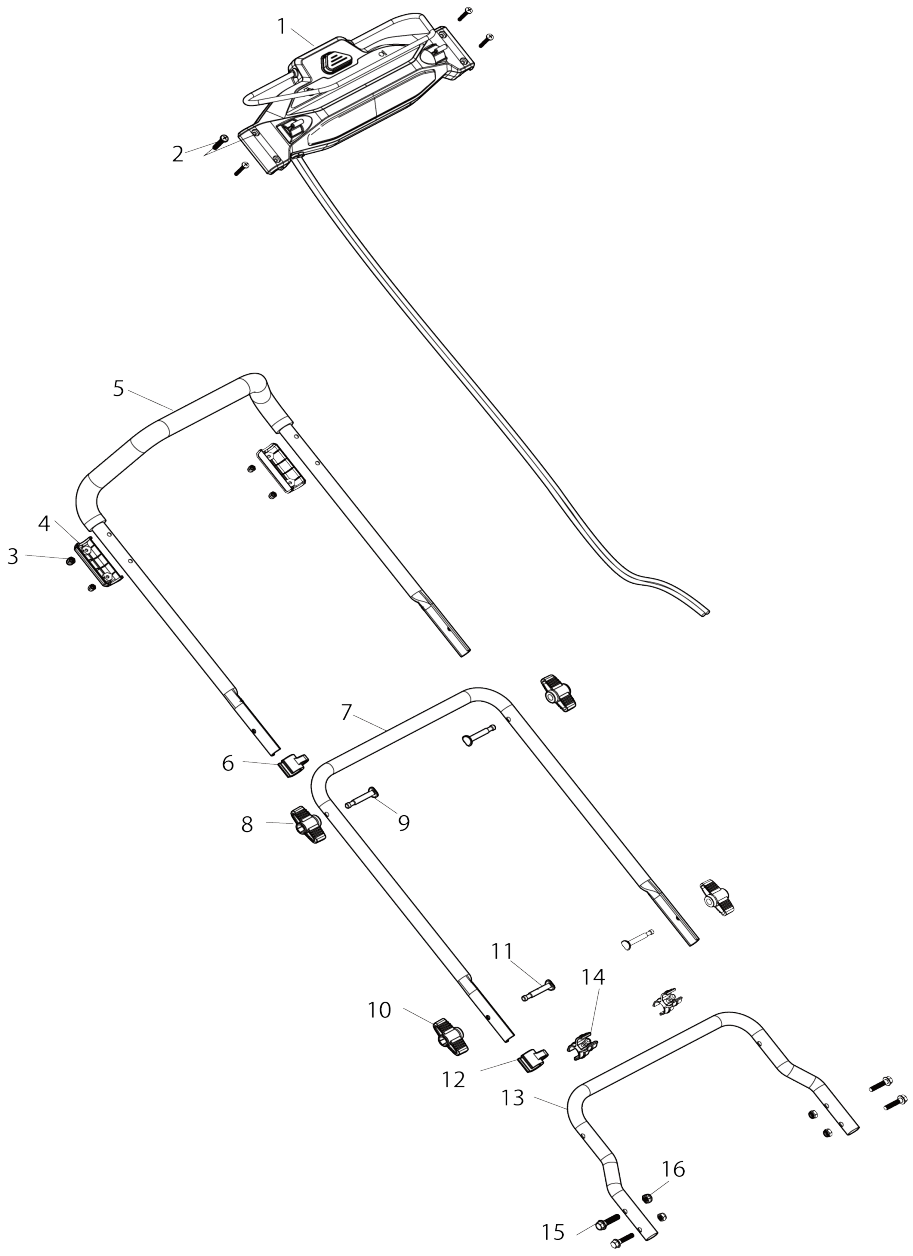

Model No.SN001G Cordless Snow Blower

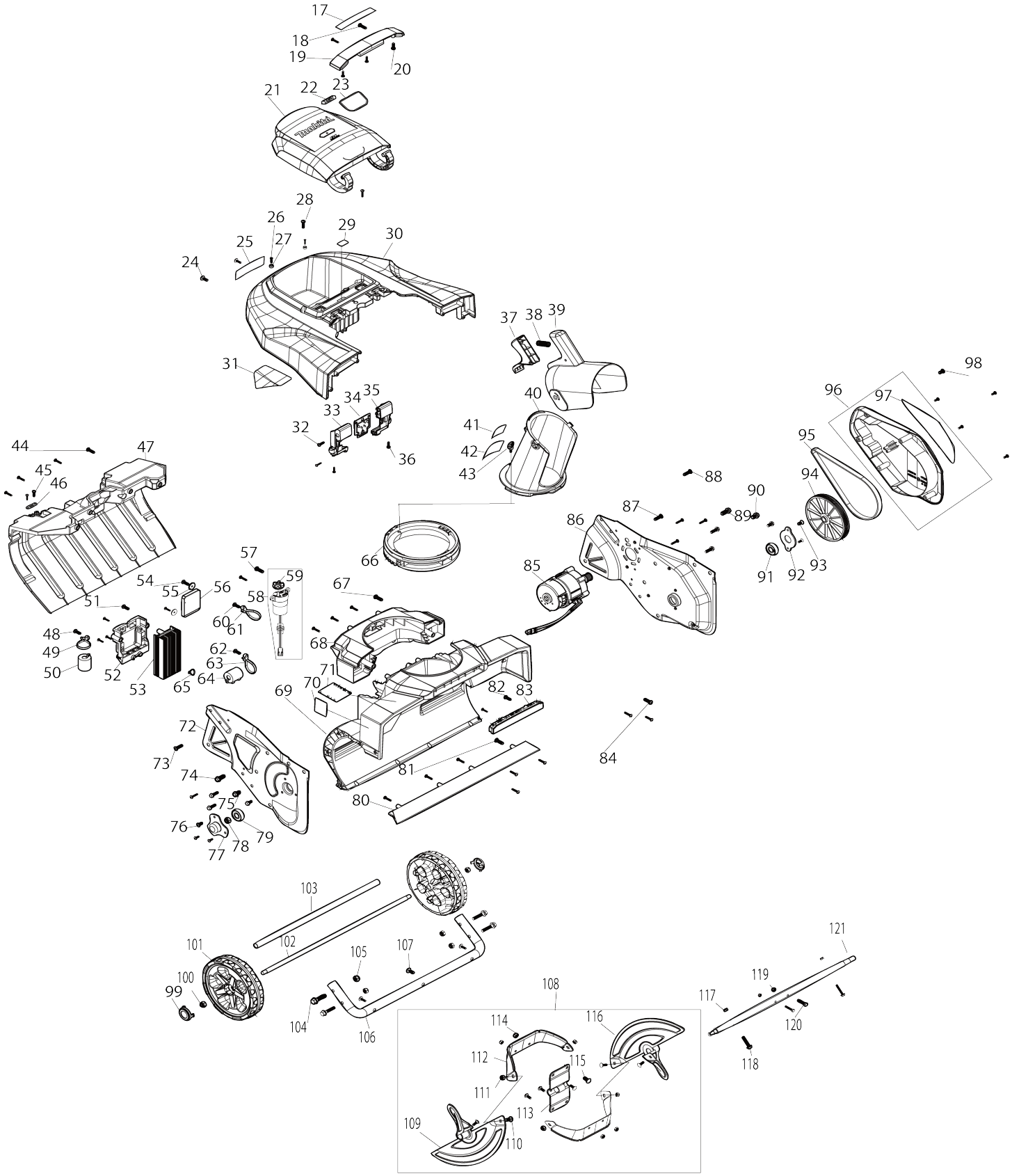

Model No.SN001G Cordless Snow Blower

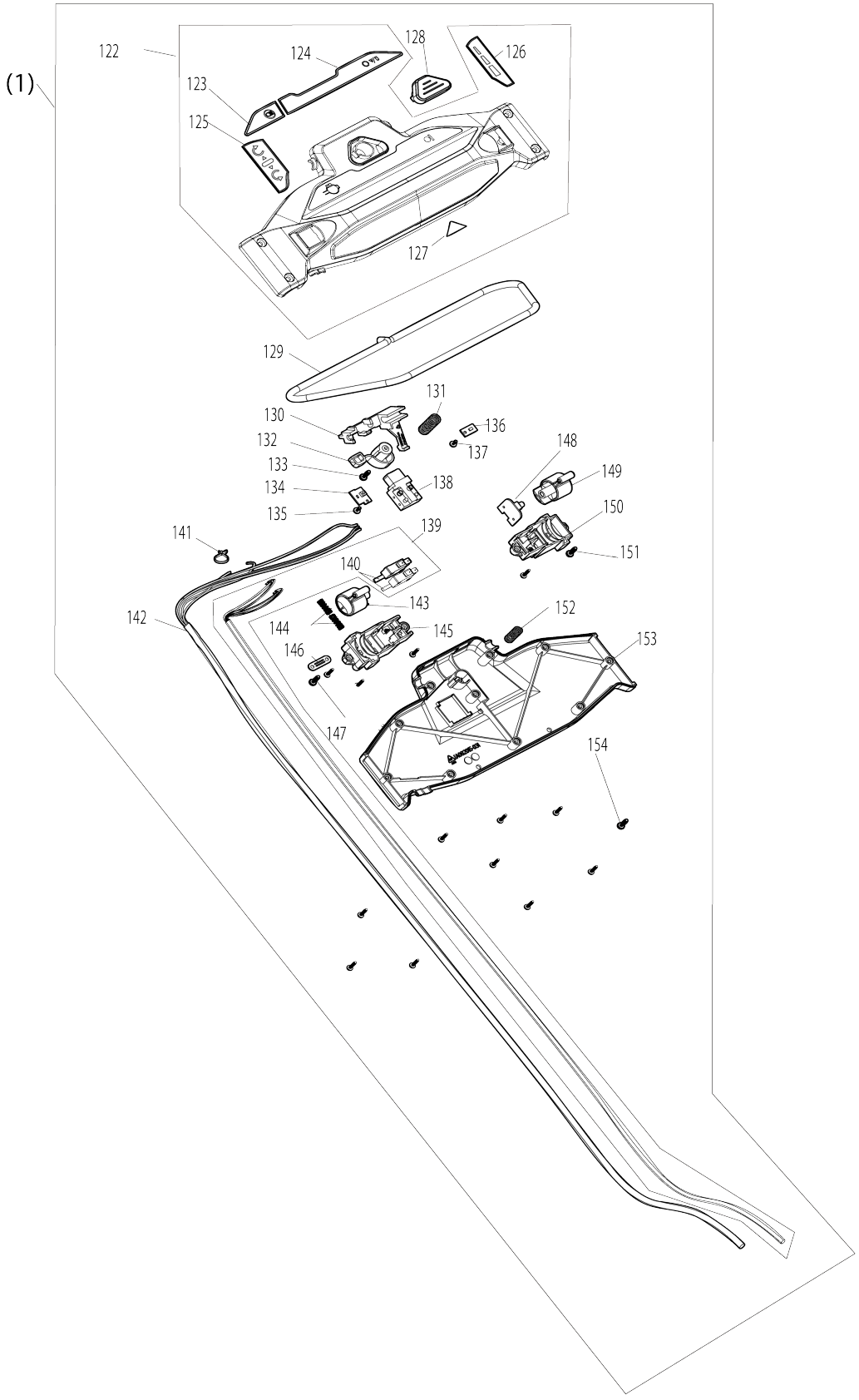

Model No.SN001G Cordless Snow Blower

Item No.	Parts No.	Description	Interchangeability	Q'ty	New/ Old	Note1	Note2
001	YA00001562	CONTROLLER BOX ASSY EU		1			
001		INC. 122,128-139,141-154					
002	YA00001448	BINDING HEAD SCREW M6X35		4			
003	YA00001447	HEX CAP NUT M6		4			
004	YA00001531	CONTROLLER BOX FIX PANEL		2			
005	YA00001563	UPPER HANDLE ASSY		1			
006	YA00001450	CORD HOLDER		1			
007	YA00001557	CENTER HANDLE ASSY		1			
008	YA00001564	WING NUT ASSY M8		2			
009	YA00001558	SADDLE HEAD CAPTIVE BOLT M8 X60		2			
010	YA00001564	WING NUT ASSY M8		2			
011	YA00001558	SADDLE HEAD CAPTIVE BOLT M8 X60		2			
012	YA00001450	CORD HOLDER		1			
013	YA00001555	LOWER HANDLE		1			
014	YA00001559	SNOW REMOVAL SPEAR HOLDER		2			
015	YA00001449	HEX FLANGE BOLT M8X35		4			
016	YA00001446	HEX FLANGE LOCK NUT M8		4			
017	YA00001477	WARNING LABEL LOW-TEMP		1			
018	YA00001493	TAPPING SCREW 5X20		2			
019	YA00001509	HINGE COVER		1			
020	YA00000820	SELF TAPPING SCREW ST5X16		3			
021	YA00001565	BATTERY COVER ASSY		1			
022	YA00001462	XGT LABEL		1			
023	YA00001460	530MM LABEL JP		1			
024	YA00001445	TRUSS HEAD TAPPING SCREW 5X 16		2			
025	YA00001454	NAME PLATE EU		1			
026	YA00001498	T10 COUNTERSUNK TAPPING 3X 16		2			
027	YA00001538	BATTERY COVER MAGNET CATCH		2	*		
028	YA00001493	TAPPING SCREW 5X20		2			
029	YA00001463	SN001G SERIAL NUMBER LABEL		1			
030	YA00001542	REAR HOUSING UPPER		1	*		
030-1	YA00001588	REAR HOUSING UPPER ASSY	<	1			
030-1		INC. 026					
031	YA00001478	DANGER LABEL PENTAGON		1			
032	YA00001443	TAPPING SCREW 4X16		2			
033	YA00001543	TERMINAL BRACKET RIGHT		1			
034	YA00001553	BATTERY TERMINAL		1			
035	YA00001544	TERMINAL BRACKET left		1			
036	YA00001443	TAPPING SCREW 4X16		2			
037	YA00001523	SNOW OUTLET ANGLE ADJUST LE VER		1			
038	YA00001533	COMPRESSION SPRING		1			
039	YA00001525	SNOW OUTLET PIPE UPPER		1			
040	YA00001524	SNOW OUTLET PIPE LOWER		1			
041	YA00001584	CAUTION LABEL OUTLET PIPE		1			

042	YA00001479	DANGER LABEL		1			
043	YA00001534	WING BOLT M5X24		1			
044	YA00001493	TAPPING SCREW 5X20		4			
045	YA00001443	TAPPING SCREW 4X16		2			
046	YA00001483	CORD CLAMP		1			
047	YA00001517	REAR HOUSING LOWER		1	*		
047-1	YA00001601	REAR HOUSING LOWER	O	1			
048	YA00001444	TAPPING SCREW FLANGE 4X16		1			
049	YA00001497	CABLE TIE WITH SCREW HOLE		1			
050	YA00001485	FERRITE CORE		1			
051	YA00001444	TAPPING SCREW FLANGE 4X16		4			
052	YA00001539	FIX PLATE FOR CONTROLLER LAR GE		1			
053	YA00001541	CONTROLLER LARGE		1			
054	YA00001444	TAPPING SCREW FLANGE 4X16		2			
055	YA00001442	FLAT WASHER 4		2			
056	YA00001540	CONTROLLER SMALL		1			
057	YA00001493	TAPPING SCREW 5X20		2			
058	YA00001567	OUTLET ANGLE ADJUST MOTOR ASSY		1			
058		INC. 59					
059	YA00001579	PINION GEAR 5		1			
060	YA00001444	TAPPING SCREW FLANGE 4X16		1			
061	YA00001497	CABLE TIE WITH SCREW HOLE		1			
062	YA00001444	TAPPING SCREW FLANGE 4X16		1			
063	YA00001497	CABLE TIE WITH SCREW HOLE		1			
064	YA00001485	FERRITE CORE		1			
065	687011-8	Band		1			
066	YA00001568	OUTLET ANGLE ADJUST RING AS SY		1			
067	YA00001493	TAPPING SCREW 5X20		4			
068	YA00001516	CENTER HOUSING		1	*		
068-1	YA00001597	CENTER HOUSING	O	1			
069	YA00001518	FRONT HOUSING		1			
070	YA00001473	NOISE LEVEL LABEL EU		1			
071	YA00001480	DANGER LABEL		1			
072	YA00001504	SIDE FRAME PANEL RIGHT		1			
073	YA00001493	TAPPING SCREW 5X20		2			
074	YA00001503	HEX FLANGE TAPPING SCREW 6. 5X2		3			
075	YA00001502	HEX FLANGE TAPPING SCREW 6. 5X1		2			
076	YA00001512	TAPPING SCREW CT 5X12		3			
077	YA00001510	BEARING RETAINER COVER		1			
078	YA00001491	HEX LOCK NUT M10		1			
079	YA00001488	BALL BEARING 6201RS		1			
080	YA00001515	SNOW SCRAPER		1			
081	YA00001493	TAPPING SCREW 5X20		4			
082	YA00001443	TAPPING SCREW 4X16		2			
083	YA00001569	LED LIGHT ASSY		1			
084	YA00001493	TAPPING SCREW 5X20		6			
085	YA00001566	MOTOR ASSEMBLY		1	*		
085-1	YA00001598	MOTOR ASSEMBLY	O	1			

086	YA00001505	SIDE FRAME PANEL LEFT		1			
087	YA00001493	TAPPING SCREW 5X20		3			
088	YA00001493	TAPPING SCREW 5X20		2			
089	YA00001503	HEX FLANGE TAPPING SCREW 6. 5X2		3			
090	YA00001502	HEX FLANGE TAPPING SCREW 6. 5X1		2			
091	YA00001488	BALL BEARING 6201RS		1			
092	YA00001482	BEARING RETAINER PLATE		1			
093	YA00001511	COUNTERSUNK HEAD SCREW CT 5X12		2			
094	YA00001453	PULLEY 132 M8 LH		1			
095	YA00001508	RIBBED BELT PJ597 235J 5REBS		1			
096	YA00001570	BELT COVER		1			
096		INC. 97					
097	YA00001459	MAKITA LOGO LABEL		1			
098	YA00001512	TAPPING SCREW CT 5X12		5			
099	YA00001496	WHEEL COVER CAP		2			
100	YA00001446	HEX FLANGE LOCK NUT M8		2			
101	YA00001571	WHEEL ASSY		2			
102	YA00001519	AXLE SHAFT 10X511		1			
103	YA00001532	AXLE PIPE 11.5X420		1			
104	YA00001449	HEX FLANGE BOLT M8X35		4			
105	YA00001446	HEX FLANGE LOCK NUT M8		4			
106	YA00001520	UNDER FRAME		1			
107	YA00001445	TRUSS HEAD TAPPING SCREW 5X 16		3			
108	YA00001581	BLADE SET		1			
108		INC. 109-116					
109	YA00001506	ROYARY BLADE RIGHT		1			
110	YA00001536	CAP SQUARE NECK BOLT M6X12		4			
111	YA00001490	HEX LOCK NUT M6		4			
112	YA00001513	ROYARY BLADE CENTOR		2			
113	YA00001514	ROYARY BLADE SUPPORT		1			
114	YA00001490	HEX LOCK NUT M6		4			
115	YA00001536	CAP SQUARE NECK BOLT M6X12		4			
116	YA00001507	ROYARY BLADE LEFT		1			
117	YA00000622	HEX LOCK NUT M5		2			
118	YA00001495	HEX FLANGE BOLT M5x30		2			
119	YA00000622	HEX LOCK NUT M5		2			
120	YA00001492	HEX BOLT M5x25		2			
121	YA00001521	BLADE SHAFT 16X505		1			
122	YA00001572	CONT. HOUSING UPPER ASSY EU		1			
122		INC. 123-127					
123	YA00001458	LIGHT SWITCH LABEL		1			
124	YA00001455	OPERATION INSTRUCTION LABE L		1			
125	YA00001457	OUTLET ANGLE ADJUST OP. LABE L		1			
126	YA00001456	SPEED CONTROL LABEL		1			
127	YA00001472	LIGHT WARNING LABEL		1			
128	YA00001527	SWITCH LINK BUTTON		1			
129	YA00001554	SWITCH LEVER		1			

130	YA00001500	SWITCH LEVER LINK ROD		1			
131	YA00001501	SWITCH LEVER RETURN SPRING		1			
132	YA00001499	SWITCH LEVER LINK		1			
133	YA00001443	TAPPING SCREW 4X16		1			
134	YA00001535	SWITCH PCB FOR LIGHT		1			
135	YA00001494	TAPPING SCREW FLANGE 3X8		1			
136	YA00001549	INDICATOR LED PCB		1			
137	YA00001494	TAPPING SCREW FLANGE 3X8		1			
138	YA00001452	MAIN SWITCH		1			
139	YA00001574	CORD WITH MICRO SWITCHES		1			
139		INC. 140					
140	YA00001451	MICRO SWITCH		2			
141	687011-8	Band		1			
142	YA00001548	CORD FOR MAIN SWITCH		1			
143	YA00001528	SWITCH KNOB		1			
144	YA00001537	COMPRESSION SPRING		2			
145	YA00001530	MICRO SWITCH MOUNT		1			
146	YA00001483	CORD CLAMP		1			
147	YA00001443	TAPPING SCREW 4X16		4			
148	YA00001522	SPEED CONT. POTENTIOMETER PCB		1			
149	YA00001528	SWITCH KNOB		1			
150	YA00001529	SPEED CONT. PCB MOUNT		1			
151	YA00001443	TAPPING SCREW 4X16		2			
152	YA00001484	SW LINK BUTTON RETURN SPRING		1			
153	YA00001526	CONTROLLER HOUSING LOWER		1			
154	YA00001443	TAPPING SCREW 4X16		10			
A01	YA00001556	SNOW REMOVAL SPEAR		1			
A02	YA00001547	PACKABLE COVER		1			

Please state Parts No. when your order.

Print Date 04/30/2026