Model No.SKR001 RECHARGEABLE ROTARY LASER

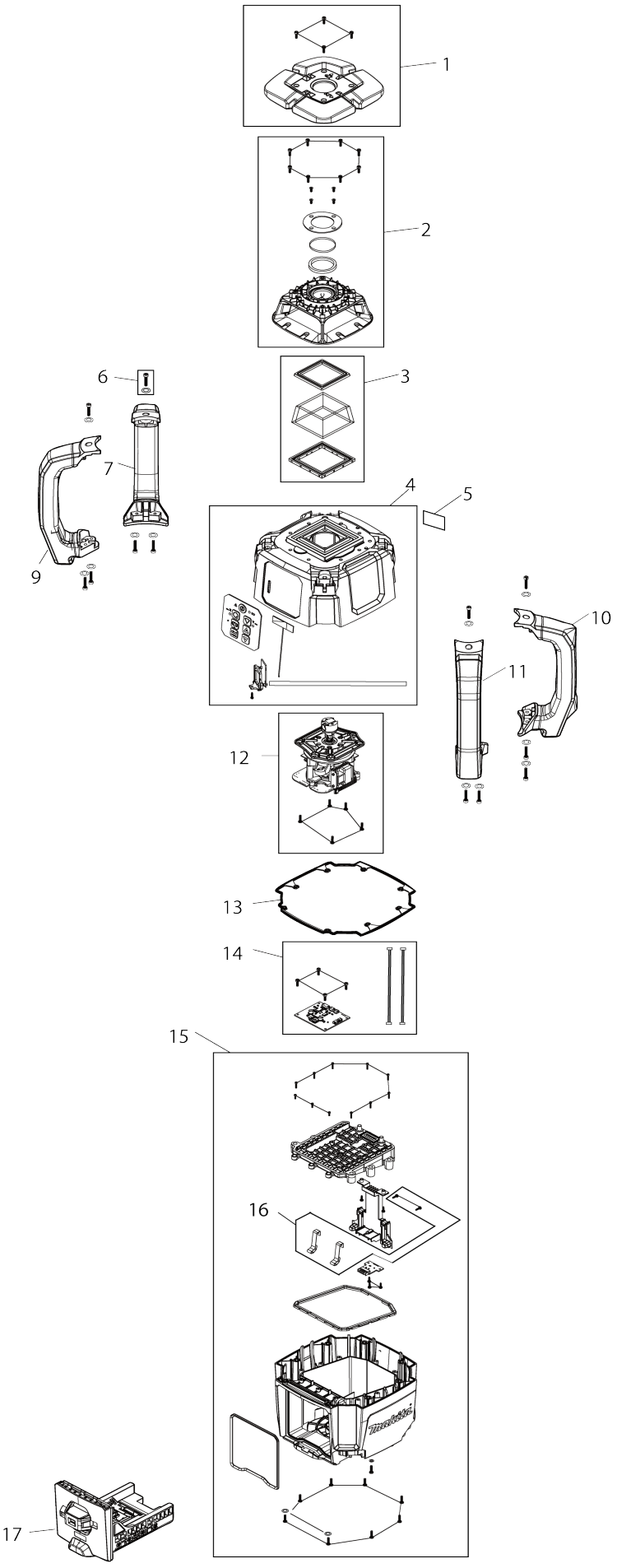

Model No.SKR001 RECHARGEABLE ROTARY LASER

Item No.	Parts No.	Description	Interchangeability	Q'ty	New/ Old	Note1	Note2
001	LE01017192	TOP BOARD & BOLT M3X8 4PCS. SE		1			
002	LE01017193	SQUARE PYRAMID HOUSING SET		1			
003	LE01017194	SQUARE PYRAMID LENZ SET		1			
004	LE01017199	HOUSIN & REMOTE UNIT SET		1			
006	LE01017204	HSH BOLT M4X20&WASHER 10PCS.		1	*		
006-1	LE01017204	HSH BOLT M4X20&WASHER 10PCS.	O	1			
007	LE01017202	HANDLE FRONT LEFT		1			
009	LE01017203	HANDLE REAR LEFT		1			
010	LE01017200	HANDLE FRONT RIGHT		1			
011	LE01017201	HANDEL REAR RIGHT		1			
012	LE01017206	LASER UNIT & SCREW SET		1			
013	LE01017197	HOUSING GASKET		1			
014	LE01017195	POWER SUPPLY UNIT & SCREW SET		1			
015	LE01017196	LOWER HOUSING COMP		1			
015		INC. 16					
016	LE01017198	BATTERY TRAY EJECT SPRING SET		1			
017	LE00981912	BATTERY TRAY LXT ASSY		1			
A01	LE00981928	LDX2 & BRACKET SET		1			
A01		INC. A03					
A03	LE00835249	RECEIVER BRACKET		1			
A04	LE00981929	RC1		1			
A06	LE00981930	WALL MOUNT FOR ROTARY LASER		1			
A07	LE01017205	PLASTIC CASE & CARTON SET		1			
C10	162271-8	LATCH		2			

Please state Parts No. when your order.

Print Date 06/02/2025