Model No.PT001G Cordless Pin Nailer

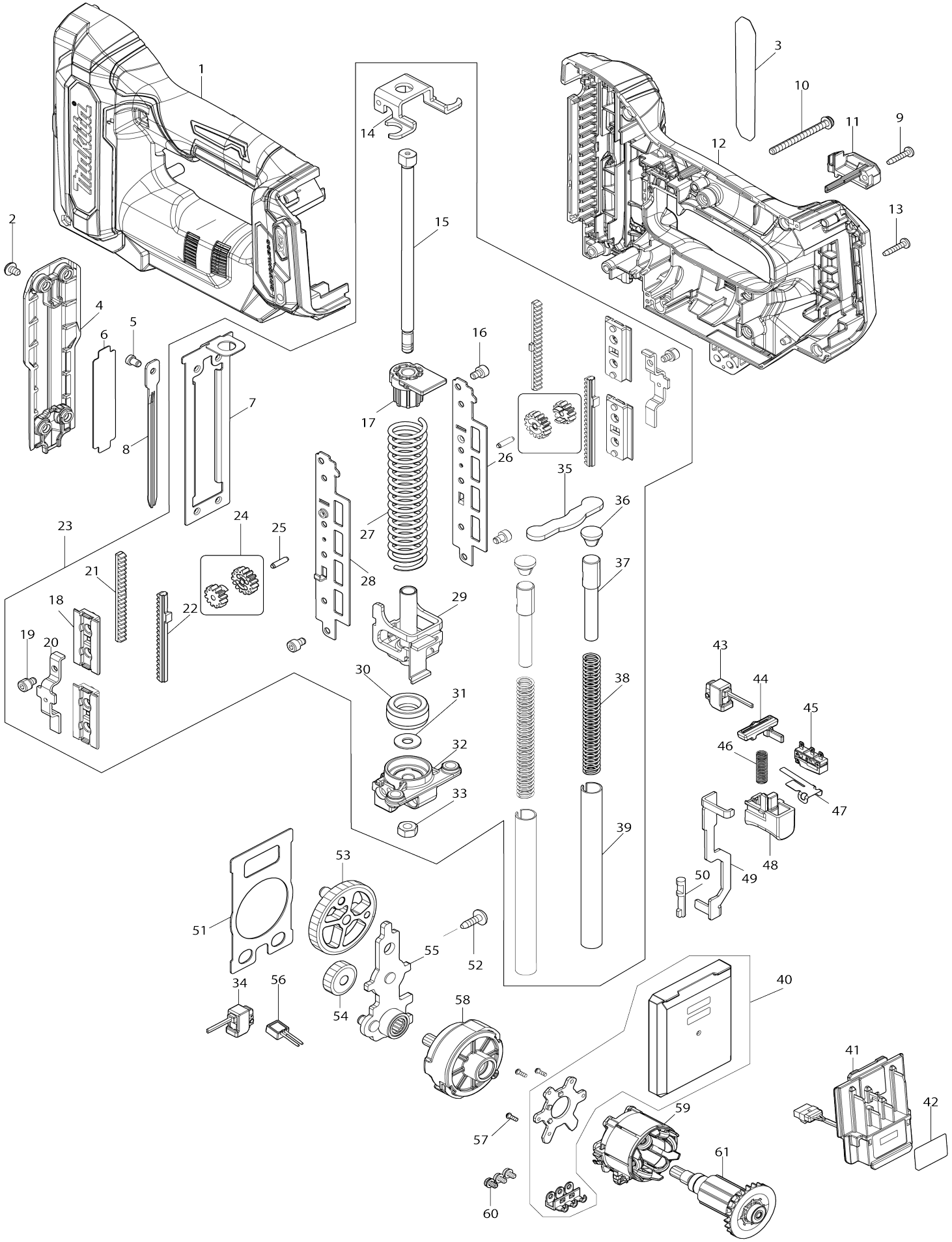

Model No.PT001G Cordless Pin Nailer

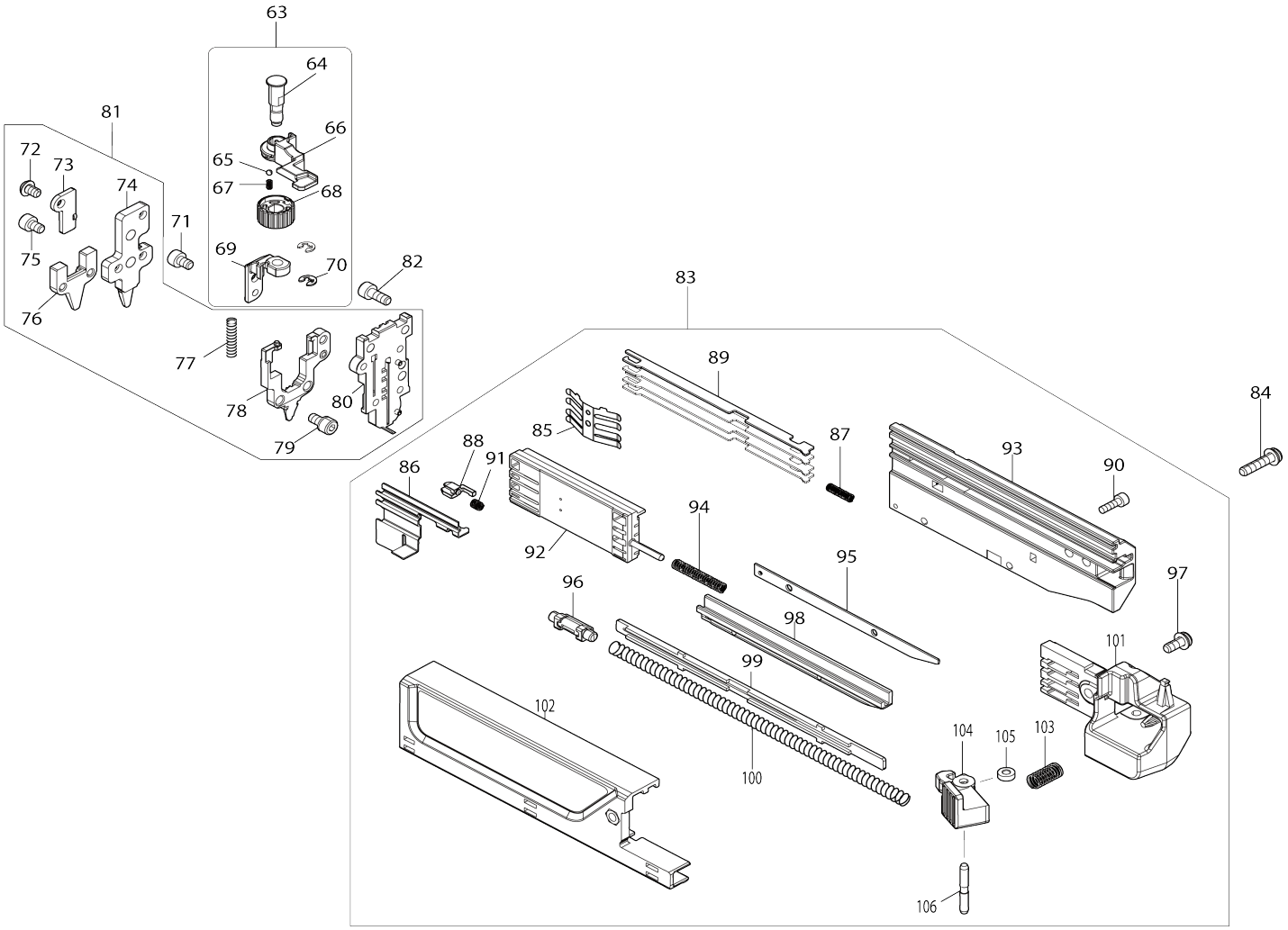

Model No.PT001G Cordless Pin Nailer

Item No.	Parts No.	Description	Interchangeability	Q'ty	New/ Old	Note1	Note2
001	183V33-3	Housing set		1	*		
C10	263005-3	Rubber pin 6		2	*		
C20	252126-6	Hex. lock nut M4-7		2	*		
C30	931102-0	Hex. nut M4		1	*		
C40	8007R2-2	XGT logo label		1	*		
001		INC. 12			*		
001-1	183X27-0	Housing set	O	1			
C10	263005-3	Rubber pin 6		2			
C20	252126-6	Hex. lock nut M4-7		2			
C30	931102-0	Hex. nut M4		1			
C40	8007R2-2	XGT logo label		1			
001-1		INC. 12					
002	915101-0	Binding head screw M4X6		4			
003	8116E5-4	Name plate PT001G		1			
004	413D63-5	Front cover		1			
005	256882-0	Flat fillister head pin 4		1			
006	347528-0	Upper plate		1			
007	347933-1	Rail		1			
008	347935-7	Driver		1			
009	266130-9	Binding head tapping screw 3X16		1			
010	911173-3	Pan head screw M4X45 WR		1			
011	413D62-7	Housing R cover		1			
012	183V33-3	Housing set		1	*		
C10	263005-3	Rubber pin 6		2	*		
C20	252126-6	Hex. lock nut M4-7		2	*		
C30	931102-0	Hex. nut M4		1	*		
C40	8007R2-2	XGT logo label		1	*		
012		INC. 1			*		
012-1	183X27-0	Housing set	O	1			
C10	263005-3	Rubber pin 6		2			
C20	252126-6	Hex. lock nut M4-7		2			
C30	931102-0	Hex. nut M4		1			
C40	8007R2-2	XGT logo label		1			
012-1		INC. 1					
013	266130-9	Binding head tapping screw 3X16		9			
014	347936-5	Bottom plate		1			
015	327939-5	Guide bolt		1			
016	266199-3	Hex. socket head bolt M4X6		4			
017	313406-6	Bottom holder		1			
018	413330-4	Counter weight holder		4			
019	251566-5	Hex. socket head bolt M4X6 W		2			
020	347146-4	Pinion guide		2			
021	313421-0	Counter weight A		2	*		
021-1	313665-2	Counter weight A	O	2			
022	310925-3	Counter weight B		2			
023	136695-4	Counter weight assembly		1	*		

023		INC. 7,14-22,24-33,35-39			*		
023-1	137266-0	Counter weight assembly	O	1	*		
023-1		INC. 7,14-22,24-33,35-39			*		
023-2	137266-0	Counter weight assembly	O	1			
023-2		INC. 7,14-22,24-33,35-39					
024	136104-3	Spur gear assembly		2			
025	326902-5	Pinion shaft		2			
026	347938-1	Guide rail L		1			
027	232741-2	Compression spring 17		1			
028	347939-9	Guide rail R		1			
029	347937-3	Hammer		1			
030	422457-9	Cushion		1	*		
030-1	422D00-8	Cushion	O	1			
031	253804-1	Flat washer 6		1			
032	312C49-9	Holder		1			
033	252273-3	Hex. nut M6		1			
034	140W22-7	Switch complete		1			
035	347729-0	Counter stopper		1			
036	422592-3	Counter cushion		2			
037	327942-6	Weight		2			
038	232630-1	Compression spring 7		2			
039	327943-4	Guide pipe		2			
040	620H97-7	Controller		1			
C10	688163-8	Line filter		1			
C20	688164-6	Line filter		1			
041	632R99-1	Terminal unit		1	*		
041-1	632W78-9	Terminal unit	<	1			
042	8116F2-7	Serial No. label PT001G		1			
043	140W22-7	Switch complete		1			
044	456799-9	Trigger lock		1			
045	632S31-1	Switch unit		1			
046	232370-1	Compression spring 5		1			
047	232672-5	Leaf spring		1			
048	413328-1	Trigger		1			
049	347932-3	Lock arm		1			
050	327941-8	Lock pin		1			
051	347934-9	Gear plate		1			
052	266901-4	Binding head tapping screw 4X14		1			
053	141G69-8	Spur gear 61 complete		1			
054	226892-1	Spur gear 25		1			
055	141G70-3	Base plate complete		1			
056	620507-6	LED circuit		1			
057	266490-9	Pan head tapping screw 2X6		3			
058	122B56-6	Gear assembly		1			
059	629A99-8	Stator		1			
060	652069-6	Flat head screw M3X6		3			
061	619727-7	Rotor		1			
063	136663-7	Adjuster assembly		1			
063		INC. 64-70					
064	327940-0	Adjuster shaft		1			
065	216031-1	Steel ball 2.3		1			

066	413D64-3	Contact arm		1			
067	234254-9	Compression spring 2		1			
068	413D61-9	Adjuster		1			
069	313405-8	Arm		1			
070	961017-7	Stop ring (EXT) E-3		2			
071	922102-1	Hex. socket head bolt M4X6		1			
072	265C44-7	Hex. socket button head bolt M4 X6		1			
073	347929-2	Spring cover		1			
074	141G71-1	Driver guide cover complete		1			
075	922102-1	Hex. socket head bolt M4X6		3			
076	313404-0	Contact top cover		1			
077	232740-4	Compression spring 3		1	*		
077-1	232996-9	Compression spring 3	<	1			
078	141D51-9	Center plate complete		1			
079	922106-3	Hex. socket head bolt M4X8 W		2			
080	141D52-7	Driver guide complete		1			
081	122B55-8	Driver guide assembly		1	*		
081		INC. 72-80			*		
081-1	122L34-6	Driver guide assembly	<	1			
081-1		INC. 72-80					
082	922112-8	Hex. socket head bolt M4X10		3	*		
082-1	922112-8	Hex. socket head bolt M4X10	O	1			
083	136657-2	Magazine assembly		1			
083		INC. 85-106					
084	911133-5	Pan head screw M4X18 WR		2			
085	232362-0	Leaf spring		1			
086	347138-3	Pusher		1			
087	232367-0	Compression spring 3		4			
088	310176-8	Stopper		1			
089	346239-4	Nail stopper		4			
090	266177-3	Hex. socket head bolt M3X10		2			
091	233018-8	Compression spring 3		1			
092	457382-5	Nail guide holder		1			
093	458195-7	Magazine		1			
094	233459-8	Compression spring 3		1			
095	347137-5	Spacer		1			
096	457383-3	Shoulder pin 5-6		1			
097	911113-1	Pan head screw M4X10 WR		1			
098	144335-0	Lower rail complete		1			
099	457387-5	Spring cover		1			
100	232366-2	Compression spring 5		1			
101	457381-7	Slide door cap		1			
102	457380-9	Upper rail		1			
103	233117-6	Compression spring 6		1			
104	413329-9	Lever		1			
105	262054-7	Urethane ring 3		1			
106	256793-9	Grooved pin 3		1			
107	922122-5	Hex. socket head bolt M4X14		2			
A02	251314-2	Truss head screw M4X12		1			
A03	346317-0	Hook		1			
A04	422844-2	Nose adapter		2			

A05	783201-2	Hex. wrench 3		1			

Please state Parts No. when your order.

Print Date 03/30/2026