Model No.PC5010C Concrete Planer

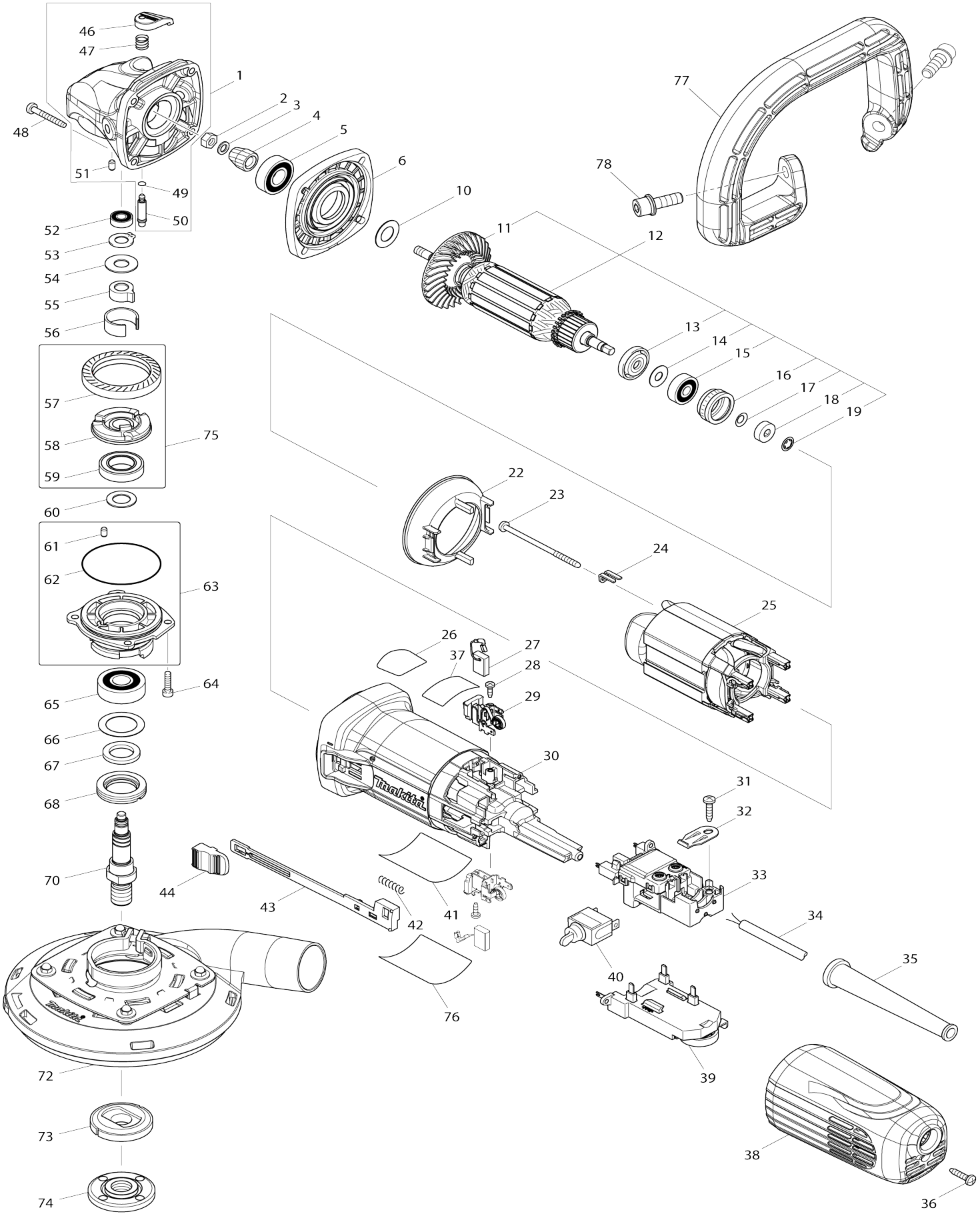

Model No.PC5010C Concrete Planer

Item No.	Parts No.	Description	Interchangeability	Q'ty	New/ Old	Note1	Note2
001	136013-6	Gear housing assembly		1	*		
001		INC. 46,47,49-51			*		
001-1	136013-6	Gear housing assembly	O	1			
001-1		INC. 46,47,49-51					
002	252186-8	Hex. nut M6		1			
003	253077-6	Flat washer 6		1			
004	227593-4	Spiral bevel gear 9		1			
005	211142-7	Ball bearing 6001LLB		1			
006	141981-0	Gear housing cover complete		1	*		
006-1	141981-0	Gear housing cover complete	O	1			
010	253084-9	Flat washer 12		1			
011	240134-9	Fan 60		1			
012	510377-0	Armature assembly 220-240V		1	*		
012		INC. 11,13-19			*		
012-1	510510-4	Armature assembly 220-240V	<	1			
012-1		INC. 11,13-19					
013	681656-4	Insulation washer		1			
014	253823-7	Flat washer 7		1			
015	210027-4	Ball bearing 627DDW		1			
016	421738-8	Labyrinth rubber ring 22		1	*		
016-1	422750-1	Labyrinth rubber ring 22	<	1			
017	267756-0	Wave washer 6		1			
018	688117-5	Magnet sleeve		1			
019	259039-2	Self lock 6		1			
022	453367-9	Baffle plate		1			
023	266258-3	Binding head tapping screw 4X70		2			
024	344871-8	Retainer		2			
025	626653-3	Field 220-240V		1			
026	898443-6	SJS2 mark label		1	*		
027	191978-9	Carbon brush set CB-318		1			
028	266007-8	Binding head tapping screw 3X10		2			
029	643770-4	Brush holder		2			
030	453366-1	Motor housing		1			
031	266326-2	Binding head tapping screw 4X18		1	*		
031-1	265B67-9	Binding head tapping screw 4X18	O	1			
032	687169-3	Strain relief		1			
033	632K98-1	Switch block		1			
034	665890-4	Power supply cord 1.0-2-4.0		1			
035	682566-8	Cord guard 10		1			
036	266326-2	Binding head tapping screw 4X18		1	*		
036-1	265B67-9	Binding head tapping screw 4X18	O	1			
037	817M63-5	Operation label		1			
038	453365-3	Rear cover C		1			

039	620736-1	Controller		1	*		
039-1	620G44-2	Controller	<	1			
040	651418-4	Switch ST115A-40		1	*		
040-1	651418-4	Switch ST115A-40	O	1			
041	854S18-5	Name plate PC5010C		1			
042	233071-4	Compression spring 4		1			
043	453847-5	Switch lever		1			
044	453368-7	Switch knob		1			
046	453369-5	Pin cap		1			
047	234057-1	Compression spring 8		1			
048	266361-0	Binding head tapping screw 4X30		4	*		
048-1	265B70-0	Binding head tapping screw 4X30	O	4			
049	213032-0	O-ring 4		1	*		
049-1	213960-9	O-ring 5	O	1			
050	256535-1	Shoulder pin 6		1			
051	263002-9	Rubber pin 4		1			
052	210006-2	Ball bearing 696ZZ		1			
053	961005-4	Retaining ring (EXT) S-9		1			
054	253180-3	Flat washer 10		1			
055	310683-1	Joint sleeve		1			
056	346556-2	C type plate		1			
057	227594-2	Spiral bevel gear 41		1			
058	313228-4	Coupling		1			
059	210302-8	Ball bearing 6903ZZ		1			
060	253744-3	Flat washer 12		1			
061	263002-9	Rubber pin 4		1			
062	213641-5	O-ring 51		1			
063	136012-8	Bearing box assembly		1	*		
063		INC. 61,62			*		
063-1	136877-8	Bearing box assembly	<	1			
063-1		INC. 61,62					
064	265490-6	Hex. socket head bolt M4X16		4			
065	211129-9	Ball bearing 6201DDW		1			
066	267279-8	Flat washer 21		1			
067	443124-3	Felt ring 17		1			
068	285854-8	Bearing retainer 20-33		1			
070	326130-2	Spindle		1			
072	195239-9	Dust collect cover K set (115/125 MM)		1	*		
C10	265180-1	Pan head screw M5X16		1	*		
072-1	127147-6	Dust collect cover 125K assembly	<	1	*		
C10	265180-1	Pan head screw M5X16		1	*		
072-2	122B42-7	Dust cover K assembly 115/125 mm	<	1			
C10	265180-1	Pan head screw M5X16		1			
073	224415-9	Inner flange 42		1			
074	224554-5	Lock nut 14-45		1			
075	135556-5	Coupling assembly		1			
075		INC. 57-59					
076	892272-9	Clear label		1			
077	458690-7	Loop handle		1			

078	922443-5	Hex. socket head bolt M8X25 WR		2			
A01	140B63-7	Steel case complete		1	*		
A01-1	141S96-7	Steel case complete	<	1			
A02	782426-5	Lock nut wrench 35		1			
F06	192227-7	Inner flange 47 set		1			
F07	194514-0	Vibration proof grip set		1			
F08	195354-9	Toolless lock nut set		1			
F10	196845-3	Dust collect cover K set (125MM)		1			
F11	196880-1	Brush set		1			
F12	198719-4	Dust cover attachment set		1			
F24	191S70-5	Dust collect cover K set 125mm		1			
F25	191W06-8	Dust cover K set 115/125mm		1			
C10	743129-6	Brush A		1			
C20	743130-1	Brush B		1			
F26	1919G1-3	CHAMFERING D.C.A. SET		1			

Please state Parts No. when your order.

Print Date 08/28/2026