Model No.LS1019L Slide Compound Miter Saw

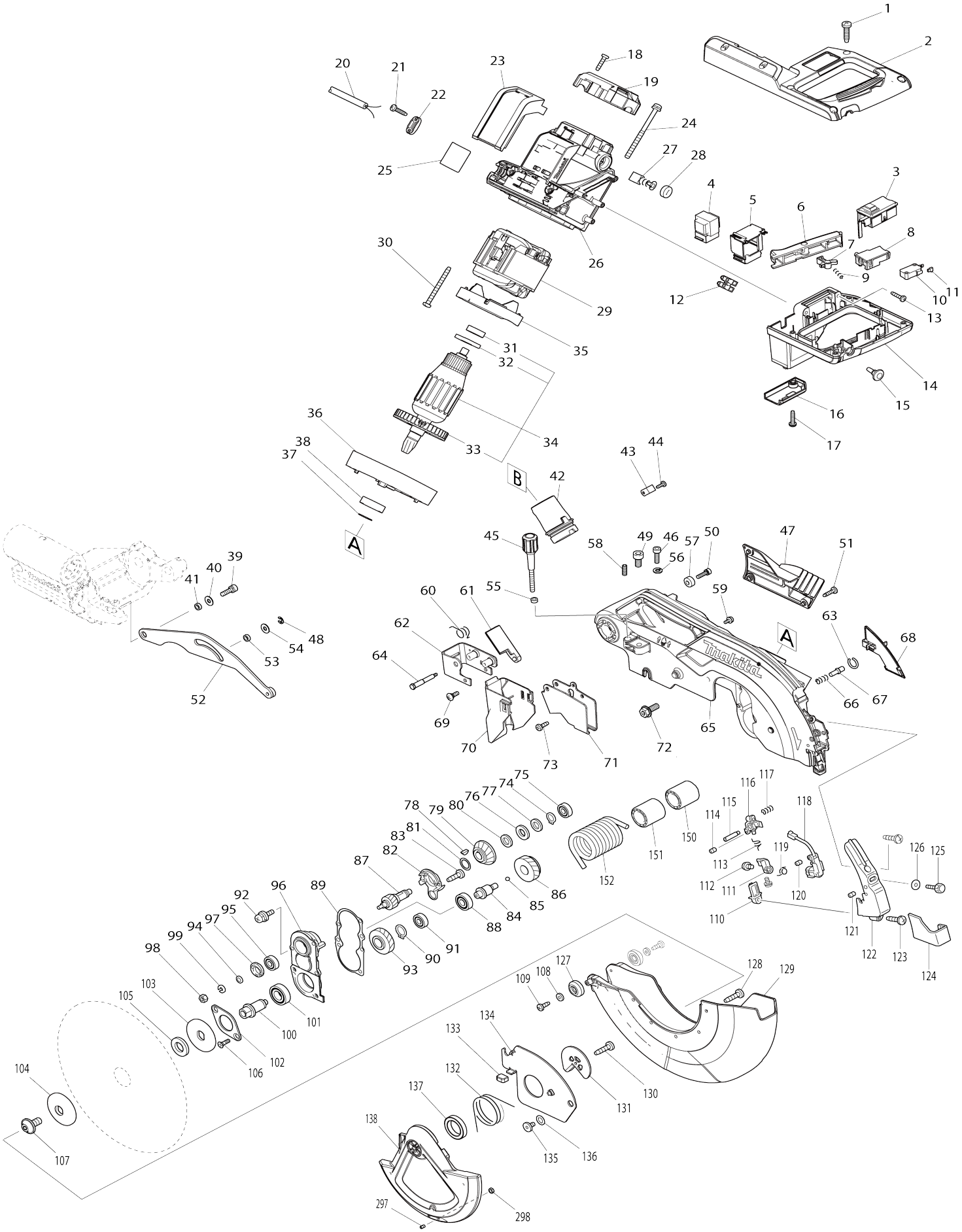

Model No.LS1019L Slide Compound Miter Saw

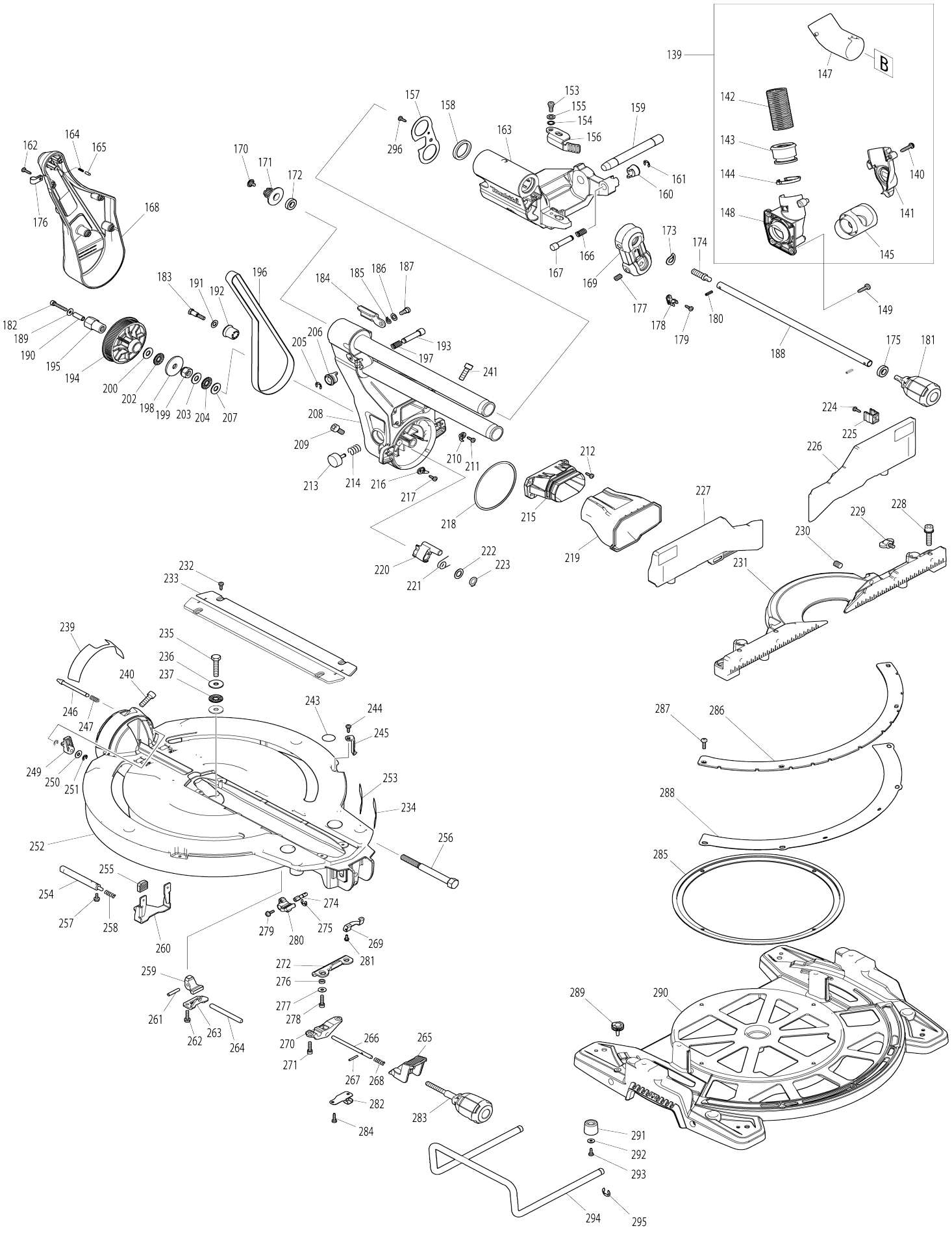

Model No.LS1019L Slide Compound Miter Saw

Item No.	Parts No.	Description	Interchangeability	Q'ty	New/ Old	Note1	Note2
001	265995-6	Binding head tapping screw 4X18		6			
002	183H19-3	Handle set		1			
C10	810486-8	Caution label		1			
C20	808641-4	Indication label switch		1			
002		INC. 14					
003	638652-3	Laser switch unit		1			
004	631908-3	Power supply circuit		1			
005	451412-4	Case		1			
006	451003-1	Switch lever		1			
007	416356-5	Lock off lever		1			
008	650687-4	Switch TGC32B		1			
009	231026-3	Compression spring 4		1			
010	651941-9	Switch V-15-2A5		1			
011	686015-7	Receptacle sleeve		2			
012	654531-7	Terminal block		1			
013	265995-6	Binding head tapping screw 4X18		4			
014	183H19-3	Handle set		1			
C10	810486-8	Caution label		1			
C20	808641-4	Indication label switch		1			
014		INC. 2					
015	451037-4	Switch button		1			
016	451000-7	Lead cover holder		1			
017	265995-6	Binding head tapping screw 4X18		1			
018	265995-6	Binding head tapping screw 4X18		2			
019	457652-2	Rear cover		1			
020	665865-3	Power supply cord 1.0-2-2.5		1			
021	265995-6	Binding head tapping screw 4X18		2			
022	687052-4	Strain relief		1			
023	631866-3	Controller		1			
024	911948-0	Pan head screw M6X80 WR		4			
025	853H90-8	Name plate LS1019L		1			
026	144533-6	Motor housing complete		1			
C10	643660-1	Brush holder 6.5-13.5		2			
027	181044-0	Carbon brush CB-153		1	*		
027-1	194985-1	Carbon brush set CB-153	O	1			
028	643650-4	Holder cap 6.5-13.5		2			
029	596349-9	Field assembly 240V		1			
C10	654020-2	Ring terminal 36L		2			
C20	654502-4	Non-insulated splice		2			
030	266095-5	Binding head tapping screw 5X55		2			
031	210067-2	Ball bearing 6000ZZ		1			
032	681642-5	Insulation washer		1			
033	240001-8	Fan 80		1			

034	517824-2	Armature assembly 240V		1			
034		INC. 31-33					
035	451001-5	Baffle plate		1			
036	319591-3	Motor bracket		1			
037	961057-5	Retaining ring (EXT) S-17		1			
038	211275-8	Ball bearing 6003DDW		1			
039	922331-6	Hex. socket head bolt M6X20 W		1			
040	253804-1	Flat washer 6		1			
041	257163-5	Ring 6		1			
042	457704-9	Dust nozzle		1	*		
042-1	459250-8	Dust nozzle	S	1			
043	687042-7	Strain relief		1			
044	266026-4	Binding head tapping screw 4X12		1	*		
044-1	266034-5	Binding head tapping screw 4X16	<	1			
045	251554-2	Thumb screw M6X40		1			
046	922332-4	Hex. socket head bolt M6X20		1			
047	457667-9	Logo plate		1			
048	961018-5	Stop ring (EXT) E-5		1			
049	251547-9	Hex. socket head bolt M8X25		1			
050	922226-3	Hex. socket head bolt M5X18 W		1			
051	266034-5	Binding head tapping screw 4X16		3			
052	144529-7	Link plate complete		1			
053	257163-5	Ring 6		1			
054	253804-1	Flat washer 6		1			
055	262001-8	Urethane ring 5		1	*		
055-1	233343-7	Compression spring 7	S	1			
056	942151-2	Spring washer 6		1	*		
056-1	253428-3	Spring washer 6	O	1			
057	257785-1	Sleeve 6		1			
058	266321-2	Hex. socket set screw (flat point) M6X16		1			
059	911114-9	Pan head screw M4X10 WG		2			
060	232412-1	Torsion spring 11		1			
061	457764-1	Dust guide plate		1			
062	161647-6	Guard holder		1			
063	231928-3	Ring spring 8		1			
064	251544-5	Hex. head shoulder bolt M4		1			
065	144634-0	Blade case complete		1			
C10	263005-3	Rubber pin 6		3			
C20	810064-4	Caution label		1			
C30	810354-5	Laser beam label		1			
066	231240-1	Compression spring 7		1			
067	256633-1	Collar HD. pin 6		1			
068	457659-8	Lead cover		1			
069	265028-7	Pan head shoulder screw M4X11		1	*		
069-1	265D50-8	Pan head screw M4X11	O	1	*		
069-2	265028-7	Pan head shoulder screw M4X11	O	1			
070	422155-5	Guard		1			
071	347215-1	Guard plate		1			
072	266283-4	Hex. socket hex. head flange bol		1			

		t M8X20					
073	266020-6	Binding head tapping screw 4X12		1			
074	961052-5	Retaining ring (EXT) S-12		1			
075	210005-4	Ball bearing 608DDW		1			
076	261104-5	Rubber washer 12		1			
077	253744-3	Flat washer 12		1			
078	254001-2	Woodruff key 4		1			
079	227550-2	Spiral bevel gear 32		1			
080	253744-3	Flat washer 12		1			
081	253313-0	Thin washer 14		1			
082	451002-3	Grease holder		1			
083	266026-4	Binding head tapping screw 4X12		2			
084	325643-0	Gear shaft		1			
085	216024-8	Steel ball 4		1			
086	227702-5	Helical gear 27		1			
087	227701-7	Helical gear 14		1			
088	210067-2	Ball bearing 6000ZZ		1			
089	442147-8	Gasket		1			
090	961055-9	Retaining ring (EXT) S-15		1			
091	210005-4	Ball bearing 608DDW		1			
092	911223-4	Pan head screw M5X16 WR		3			
093	227703-3	Helical gear 28		1			
094	267010-2	Flat washer 5		1			
095	210005-4	Ball bearing 608DDW		1			
096	158957-0	Bearing box complete		1			
C10	263002-9	Rubber pin 4		1			
097	285847-5	Bearing retainer 14-23		1			
098	931202-6	Hex. nut M5		1			
099	942101-7	Spring washer 5		1	*		
099-1	253427-5	Spring washer 5	O	1			
100	325644-8	Spindle		1			
101	211236-8	Ball bearing 6002DDW		1			
102	285732-2	Bearing retainer 51		1			
103	224431-1	Inner flange 53		1			
104	224432-9	Outer flange 53		1			
105	257262-3	Ring 16		1			
106	265034-2	Countersunk head screw M5X16		2	*		
106-1	265D49-3	Countersunk head screw M5X16	O	2	*		
106-2	265034-2	Countersunk head screw M5X16	O	2			
107	266755-9	Hex. socket head flange bolt M10X20		1			
108	941051-3	Flat washer 4		2			
109	266020-6	Binding head tapping screw 4X12		2			
110	418104-8	Lens		1			
111	419378-4	Block B		1			
112	911003-8	Pan head screw M3X6 WR		2			
113	231664-1	Torsion spring 9		1			
114	266318-1	Hex. socket set screw (flat point) M4X6		1			
115	266306-8	Shoulder screw M5		1			

116	419379-2	Block C		1			
117	233471-8	Compression spring 6		1			
118	638651-5	Laser circuit complete		1			
119	231664-1	Torsion spring 9		1			
120	266318-1	Hex. socket set screw (flat point) M4X6		1			
121	266229-0	Hex. socket set screw (cup point) M5X8		2			
122	457660-3	Laser cover		1			
123	266034-5	Binding head tapping screw 4X16		2			
124	457664-5	Protector		1			
125	265753-0	Thumb screw M5X24		1			
126	253807-5	Flat washer 5		1			
127	424193-3	Roller		2			
128	266385-6	Binding head tapping screw 4X14		3			
129	457499-4	Safety cover B		1			
130	266385-6	Binding head tapping screw 4X14		1			
131	347213-5	Center plate		1			
132	231634-0	Torsion spring 45		1			
133	424190-9	Cushion		1			
134	347214-3	Center cover		1			
135	265985-9	Hex. socket shoulder head bolt M6X9		1			
136	253932-2	Wave washer 10		1			
137	210168-6	Ball bearing 6805DDW		1			
138	457498-6	Safety cover A		1	*		
138-1	458437-9	Safety cover A	S	1			
139	123980-4	Dust nozzle assembly		1	*		
139		INC. 140-145,147,148			*		
139-1	127427-0	Dust nozzle assembly	S	1	*		
C10	458939-5	Button A	S	1	*		
C20	232485-4	Compression spring 5	S	1	*		
139-1		INC. 140-144,147,148			*		
139-2	127427-0	Dust nozzle assembly	O	1			
C10	458939-5	Button A		1			
C20	232485-4	Compression spring 5		1			
139-2		INC. 141-144,147					
140	265995-6	Binding head tapping screw 4X18		3	*		
141	183G68-4	Dust nozzle connector set		1	*		
141		INC. 148			*		
141-1	183H71-1	Hose connector set	S	1	*		
141-1		INC. 148			*		
141-2	413J67-3	Hose connector	S	1			
142	245041-1	Hose 28-0.45		1			
143	457672-6	Sleeve		2	*		
143-1	457672-6	Sleeve	S	1			
144	457673-4	Stopper		2	*		
144-1	457673-4	Stopper	S	1			
145	457669-5	Dust nozzle A		1	*		
145-1	457669-5	Dust nozzle A	O	1	*		

147	457703-1	Elbow		1	*		
147-1	459249-3	Hose joint	S	1			
148	183G68-4	Dust nozzle connector set		1	*		
148		INC. 141			*		
148-1	183H71-1	Hose connector set	S	1	*		
148-1		INC. 141			*		
149	266034-5	Binding head tapping screw 4X16		3			
150	457665-3	Sleeve 17		1			
151	457665-3	Sleeve 17		1			
152	233537-4	Torsion spring 35		1			
153	251267-5	Pan head shoulder screw M6		1			
154	253948-7	Wave washer 8		1			
155	253835-0	Flat washer 8		1			
156	347221-6	Stopper arm		1			
157	347222-4	Front arm plate		1			
158	262076-7	Felt ring 30		2			
159	326994-4	Rod 16		1			
160	271437-0	Knob 22		1			
161	961013-5	Stop ring (EXT) E-7		1			
162	266034-5	Binding head tapping screw 4X16		4			
163	144531-0	Front arm complete		1			
C10	263005-3	Rubber pin 6		2			
164	233151-6	Compression spring 4		1			
165	256364-2	Pin 4		1			
166	232384-0	Compression spring 10		1			
167	326977-4	Stopper pin		1			
168	457653-0	Arm cover		1			
169	144658-6	Holder complete		1			
C10	812X89-8	Operation label		1			
170	265008-3	Flat head shoulder screw M5		1			
171	222191-9	Pulley 17-19.3		1			
172	210167-8	Ball bearing 6900LLB		1			
173	267804-5	Wave washer 15		1			
174	326975-8	Shaft		1			
175	210167-8	Ball bearing 6900LLB		1			
176	687042-7	Strain relief		1			
177	913416-9	Hex. socket set screw (cup point) M8X12		2			
178	416536-3	Wrench holder		1			
179	266026-4	Binding head tapping screw 4X12		1			
180	951107-4	Spring pin 4-14		2			
181	273016-0	Grip 50B		1			
182	265919-2	Hex. socket head bolt M5X30		1			
183	251545-3	Hex. head shoulder bolt M6		1			
184	144657-8	Stopper lever complete		1			
C10	812X87-2	Operation label		1			
185	253948-7	Wave washer 8		1			
186	253835-0	Flat washer 8		1			
187	251267-5	Pan head shoulder screw M6		1			
188	326987-1	Pin 9-365		1			

189	253194-2	Flat washer 5		1			
190	257426-9	Sleeve 5		1			
191	253165-9	Flat washer 8		1			
192	457666-1	Sleeve 20		1			
193	326977-4	Stopper pin		1			
194	222192-7	Pulley 17-87.8		1			
195	326980-5	Hex. lock nut M10-19		1			
196	225101-5	Synchro belt 15-756		1			
197	232384-0	Compression spring 10		1			
198	253388-9	Flat washer 10		1			
199	252244-0	Hex. lock nut M10-17		1			
200	253024-7	Flat washer 10		1			
202	216413-7	Thrust needle cage 1024		1			
203	253024-7	Flat washer 10		1			
204	216413-7	Thrust needle cage 1024		1			
205	961013-5	Stop ring (EXT) E-7		1			
206	271437-0	Knob 22		1			
207	253024-7	Flat washer 10		1			
208	144530-2	Arm complete		1			
C10	812X88-0	Operation label		1			
209	251547-9	Hex. socket head bolt M8X25		1			
210	457871-0	Indication plate R		1			
211	266026-4	Binding head tapping screw 4X12		1			
212	266034-5	Binding head tapping screw 4X16		4			
213	415208-7	Release button		1			
214	233031-6	Compression spring 12		1			
215	457654-8	Dust guide holder		1			
216	457870-2	Pointer L		1			
217	266026-4	Binding head tapping screw 4X12		1			
218	253389-7	Washer 94		1			
219	422156-3	Dust guide		1			
220	319593-9	Stopper		1			
221	231646-3	Torsion spring 14		1			
222	253744-3	Flat washer 12		1			
223	961052-5	Retaining ring (EXT) S-12		1			
224	266026-4	Binding head tapping screw 4X12		2			
225	457668-7	Holder		2			
226	144650-2	Upper fence R complete		1			
C10	810503-4	Caution label		1			
227	144646-3	Upper fence L complete		1			
C10	810503-4	Caution label		1			
228	922458-2	Hex. socket head bolt M8X35 WR		4			
229	251887-5	Thumb screw M6X10		2			
230	251561-5	Hex. socket set screw (flat point) M10X12		2			
231	319565-4	Guide fence		1			
232	266026-4	Binding head tapping screw 4X12		4			
233	451013-8	Kerf board		2			

235	265442-7	Hex. head bolt M8X40		1			
236	253852-0	Flat washer 8		2			
237	216413-7	Thrust needle cage 1024		1			
239	812X86-4	Bevel scale label		1			
240	251547-9	Hex. socket head bolt M8X25		1			
241	251547-9	Hex. socket head bolt M8X25		1			
243	813L22-1	Caution label		2			
244	266026-4	Binding head tapping screw 4X12		2			
245	457702-3	Pointer		2			
246	326970-8	Lock pin 8		1			
247	234122-6	Compression spring 6		1			
249	457657-2	Lever 25		1			
250	253804-1	Flat washer 6		1			
251	961018-5	Stop ring (EXT) E-5		2			
252	144654-4	Turn base complete		1			
252		INC. 239,243,253					
253	812X85-6	Caution label		1			
254	326973-2	Rod 12		1			
255	286039-9	Cap		2			
256	326976-6	Center shaft		1			
257	911113-1	Pan head screw M4X10 WR		2			
258	231325-3	Compression spring 6		1			
259	310803-7	Turn stopper		1			
260	347217-7	Lever plate		1			
261	256186-0	Pin 5		1			
262	911231-5	Pan head screw M5X20 W		2			
263	347219-3	Stopper holder		1			
264	326971-6	Lock rod		1			
265	457656-4	Lock lever		1			
266	326969-3	Lock pin 6		1			
267	256158-5	Pin 3		1			
268	231325-3	Compression spring 6		1			
269	347237-1	Cam plate		1			
270	319592-1	Pin holder		1			
271	922231-0	Hex. socket head bolt M5X20 W		2			
272	347216-9	Lock plate		1			
274	326972-4	Rod 6		1			
275	961011-9	Stop ring (EXT) E-4		1			
276	257425-1	Ring 5		2			
277	253194-2	Flat washer 5		2			
278	922231-0	Hex. socket head bolt M5X20 W		2			
279	911113-1	Pan head screw M4X10 WR		1			
280	144656-0	Lever 25 complete		1			
C10	263005-3	Rubber pin 6		1			
281	911008-8	Pan head screw M3X8 WR		1			
282	345272-3	Lock lever plate		1			
283	273015-2	Grip 50A		1			
284	266026-4	Binding head tapping screw 4X12		2			
285	457655-6	Slide plate		1			
286	347223-2	Miter scale plate		1	*		

286-1	347412-9	Miter scale plate	<	1			
287	251546-1	Pan head shoulder screw M5		4			
288	347218-5	Miter lock plate		1			
289	265786-5	Thumb screw M5X16		2			
290	319560-4	Base		1	*		
290-1	310891-4	Base	O	1	*		
290-2	310891-4	Base	S	1			
291	421845-7	Foot		4			
292	267195-4	Flat washer 4		4			
293	266026-4	Binding head tapping screw 4X12		4			
294	326978-2	Holder 200		2	*		
294-1	327095-1	Holder 200	S	2			
295	961015-1	Stop ring (EXT) E-9		2			
296	266026-4	Binding head tapping screw 4X12		1			
297	266318-1	Hex. socket set screw (flat point) M4X6		1			
298	931102-0	Hex. nut M4		1	*		
299	941152-7	Flat washer 6	S	1			
A01	122852-0	Dust bag assembly		1			
C10	410602-8	Fastener		1			
A02	126617-2	Vise assembly		1			
A03	762001-3	Triangular rule		1			
A04	B-11019	TCT SAW BLADE 260X60TX30		1	*		
A04-1	B-64630	TCT BLADE260X45T WOOD EFFICUT	O	1	*		
A04-2	E-27763	TCT SAW EFFI 260X45T	<	1			
A05	781044-6	Hex. wrench 6		1			
A06	783208-8	Hex. wrench 2.5		1			
F02	192628-9	Crown molding stopper set		1			
F03	198688-9	Stand set		1			
F04-1	198687-1	Stand set	<	1			
F07	191C01-8	Sub base assembly set		1			