Model No.LS0816F 216MM SLIDE COMPOUND MITER SAW

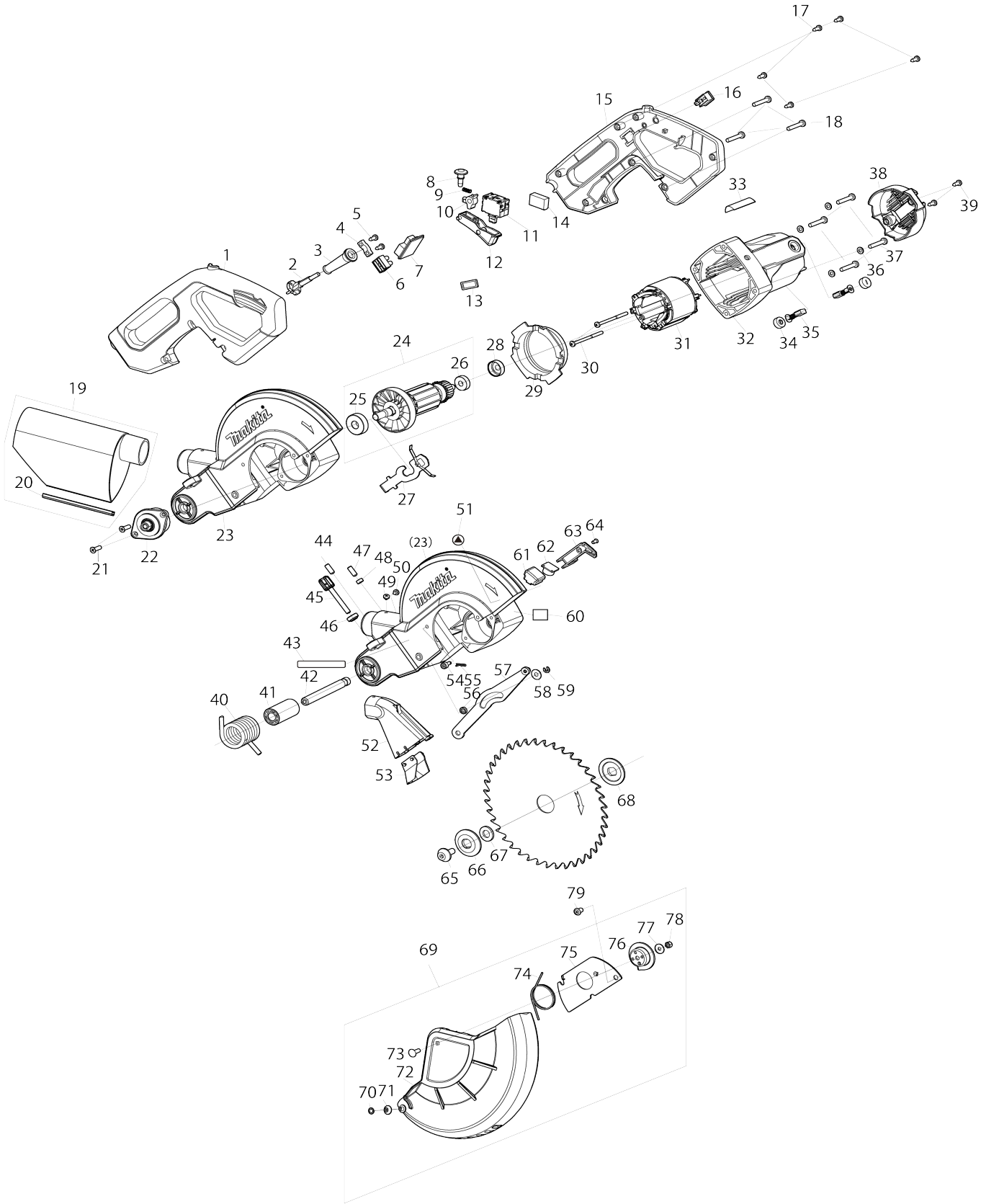

Model No.LS0816F 216MM SLIDE COMPOUND MITER SAW

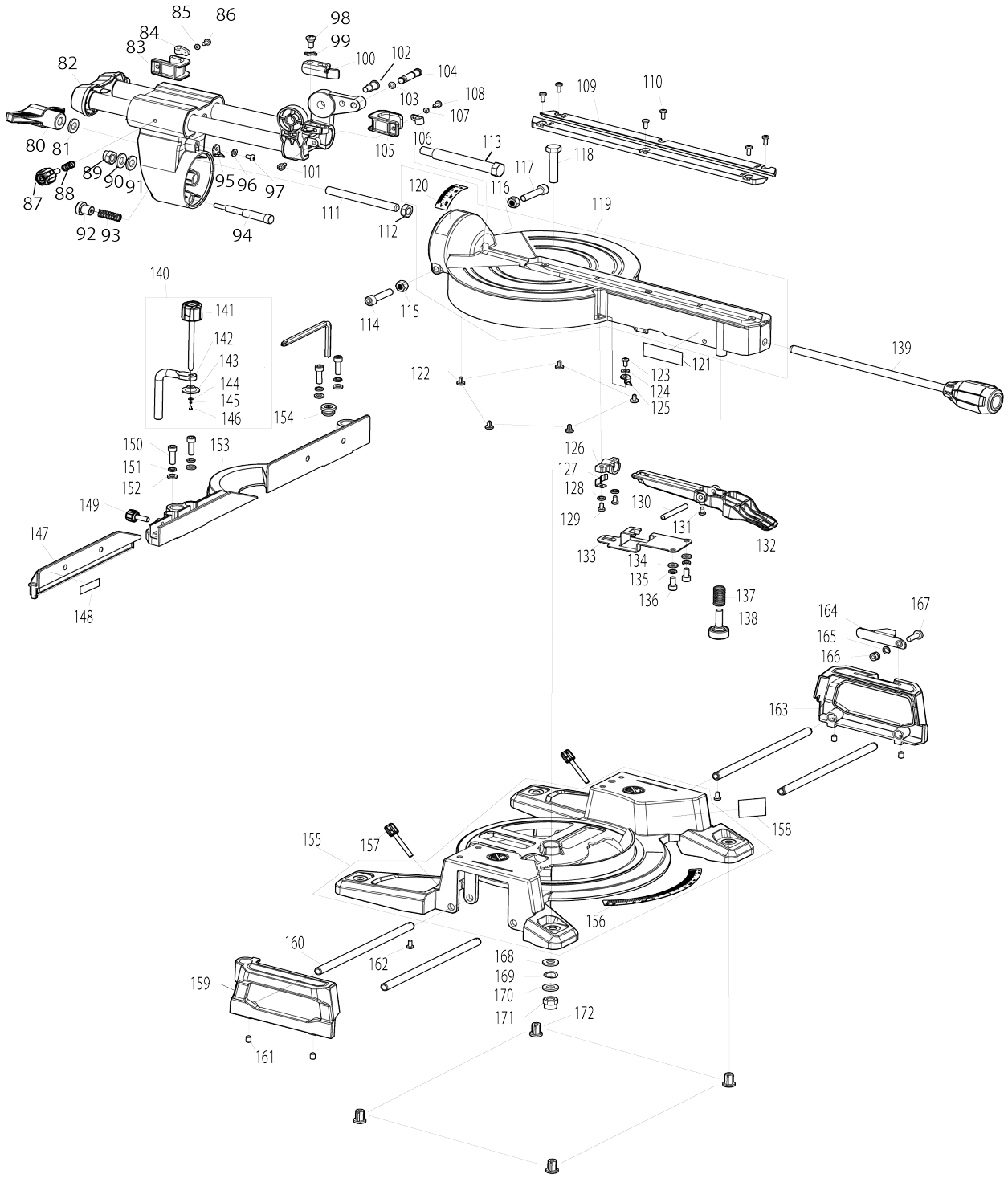

Model No.LS0816F 216MM SLIDE COMPOUND MITER SAW

Item No.	Parts No.	Description	Interchangeability	Q'ty	New/ Old	Note1	Note2
001	JM00000583	HANDLE LEFT		1			
002	JM23000154	PW SUPPLY CORD H05VV-F 1-2 E U		1			
003	JM23100165	CORD GUARD S		1			
004	JM00000584	CORD CLAMP		1			
005	JM00000548	TAPPING SCREW ST4.2X13		2			
006	JM23100171	TERMINAL BLOCK 2P		1			
007	JM00000573	PW CIRCUIT FOR LED LAMP		1			
008	JM23100177	LOCK OFF BUTTON		1			
009	JM00000582	COMPRESSION SPRING		1			
010	JM00000581	LOCK OFF LINK ROCKER		1			
011	JM00000576	SWITCH		1			
012	JM00000575	SWITCH LEVER		1			
013	JM00000578	FERRITE RING		1			
014	JM23100169	CAPACITOR		1			
015	JM00000580	HANDLE RIGHT		1			
016	JM00000579	LAMP SWITCH		1			
017	JM00000548	TAPPING SCREW ST4.2X13		5			
018	JM00000551	PAN HEAD SCREW M5X30		3			
019	JM00000535	DUST BAG ASSY		1			
D10		INC. 20					
020	JM00000534	DUST BAG CLAMP		1			
021	JM27000317	FLAT HEAD SCREW M5X16		2			
022	JM00000542	SPINDLE GEAR ASSY		1			
023	JM00000527	UPPER BLADE GUARD COMP		1	*		
023-1	JM00000698	UPPER BLADE GUARD COMP	X	1			
024	JM23500001	ARMATURE ASSY (230V)		1	*		
D10		INC. 25,26					
024-1	JM00000684	ARMATURE ASSY (230V)	X	1			
D10		INC. 25,26					
025	JM23500137	BALL BEARING 6201		1			
026	JM23500111	BALL BEARING 608		1			
027	JM00000569	SPINDLE LOCK LEVER COMPLETE		1			
028	JM23500112	DAMPING RING		1			
029	JM00000556	BUFFLE PLATE		1			
030	JM00000555	SELF TAPPING SCREW ST4.2X65		2			
031	JM23500004	FIELD 230V		1	*		
031-1	JM00000685	FIELD 230V	X	1			
032	JM00000599	MOTOR HOUSING ASSY		1			
033	JM00000558	NAME PLATE EU		1			
034	JM00000567	BRUSH CAP		2			
035	JM00000566	CARBON BRUSH 2PCS SET		1			
036	JM23100007	FLAT WASHER 5		4			
037	JM00000551	PAN HEAD SCREW M5X30		4			
038	JM00000549	MOTOR END COVER		1			
039	JM00000548	TAPPING SCREW ST4.2X13		2			
040	JM00000518	TORSION SPRING 41		1			
041	JM00000519	SPRING BUSH		1			

042	JM00000497	PIVOT SHAFT 12X107		1			
044	JM00000537	HEX SOCKET SET SCREW M6X16		1			
045	JM00000444	KNOB BOLT M6X46		1			
046	JM00000536	KNURLED NUT M6		1			
047	JM00000538	SET SCREW M6X18		1			
048	JM23100035	ANTI-LOOSEN RING		1			
049	JM00000539	TAPPING SCREW ST4.2X6.5		1			
050	JM00000539	TAPPING SCREW ST4.2X6.5		1			
051	JM00000589	CAUTION LABEL		1			
052	JM00000521	DUST PORT		1			
053	JM00000520	DUST CHUTE PLATE		1			
054	JM00000532	HEX SOCKET HEAD BOLT M6X18		1			
055	JM00000531	R-PIN 6		1			
056	JM23100098	LINK SLEEVE		1			
057	JM00000522	LINK PLATE COMP		1			
058	JM23100071	THIN FLAT WASHER 6		1			
059	JM00000525	STOP RING E-5		1			
061	JM00000540	LED LAMP BOX		1			
062	JM00000541	LED LAMP COMP		1			
063	JM00000526	LED WIRE COVER		1			
064	JM23100065	PAN HEAD SCREW M4X8		1			
065	JM00000514	HEX SOCKET HEAD BOLT M8X20 LH		1			
066	JM23500038	BLADE FLANGE		1			
067	JM27000100	BLADE INNER LING 30.0		1			
068	JM23500038	BLADE FLANGE		1			
069	JM00000502	LOWER BLADE GUARD ASSY		1			
D10		INC. 70-78					
070	JM00000503	PUSH NUT 5		1			
071	JM00000504	GUARD WHEEL		1			
072	JM00000506	LOWER BLADE GUARD		1			
073	JM00000505	SQUARE NECK BOLT M5X12		1			
074	JM00000507	TORSION SPRING 40		1			
075	JM00000508	GUARD FIX PLATE		1			
076	JM00000509	BOWL PLATE		1			
077	JM00000510	FLAT WASHER 5L		1			
078	JM23100141	HEX LOCK NUT 5		1			
079	JM00000530	STEPPED TRASS HEAD BOLT M6X 10		1			
080	JM00000477	WING NUT M10		1			
081	JM23100010	FLAT WASHER 10		1			
082	JM00000485	SLIDING ARM ASSY		1			
083	JM00000501	CORD REEL HOOK		1			
084	JM00000500	CORD CLIP		1			
085	JM00000499	BIG FLAT WASHER 5		1			
086	JM00000498	PAN HEAD SCREW M5X16		1			
087	JM00000478	KNOB BOLT M6X20		1			
088	JM00000479	COMPRESSION SPRING 9X18		1			
089	JM23100009	HEX LOCK NUT M10		1			
090	JM23100010	FLAT WASHER 10		1			
091	JM23100010	FLAT WASHER 10		1			
092	JM00000480	KNOB NUT M5		1			

093	JM00000481	COMPRESSION SPRING 10X32		1			
094	JM00000483	BEVEL STEP STOPPER BOLT M5X 18		1			
095	JM00000482	BEVEL SCALE POINTER		1			
096	JM23100016	FLAT WASHER 4		1			
097	JM23100065	PAN HEAD SCREW M4X8		1			
098	JM00000517	STEPPED PAN HEAD SCREW M6X 10		1			
099	JM23100094	WAVE WASHER 8		1			
100	JM00000516	CUTTING DEPTH ADJUSTABLE PL ATE		1			
101	JM00000495	STEPPED H.S.H.BOLT M6X10		1			
102	JM00000515	H.S.H. SPECIAL BOLT M10X10		1			
103	JM23100150	SEALING RING		1			
104	JM00000496	LOCK PIN		1			
105	JM00000501	CORD REEL HOOK		1			
106	JM00000500	CORD CLIP		1			
107	JM00000499	BIG FLAT WASHER 5		1			
108	JM00000498	PAN HEAD SCREW M5X16		1			
109	JM00000476	KERF BOARD		2			
110	JM23100033	PAN HEAD SCREW M4X12		6			
111	JM00000484	HEX SOCKET SCREW ROD M10X1 00		1			
112	JM23000015	HEX NUT M10		1			
113	JM00000467	CONNECTION SHAFT BOLT M10X 20		1			
114	JM00000451	HEX SOCKET HEAD BOLT M8X35		1			
115	JM23000028	HEX. NUT M8		1			
116	JM23000028	HEX. NUT M8		1			
117	JM00000451	HEX SOCKET HEAD BOLT M8X35		1			
118	JM00000468	HEX BOLT M10X45		1			
119	JM00000469	TURN TABLE COMPLETE		1	*		
D10		INC. 120					
119-1	JM00000681	TURN TABLE COMPLETE	<	1			
D10		INC. 120					
120	JM00000470	SUPPORT ARM SCALE LABEL		1			
121	JM23180057	CAUTION LABEL		1			
122	JM00000453	SLIDING FOOT		5			
123	JM23100065	PAN HEAD SCREW M4X8		1			
124	JM23100016	FLAT WASHER 4		1			
125	JM00000465	TURN BASE POINTER		1			
126	JM00000454	BACK SUPPORT		1			
127	JM00000455	LOCK PLATE		1			
128	JM23100015	SPRING WASHER 4		2			
129	JM00000456	PAN HEAD SCREW M4X16		2			
130	JM00000464	PIN 6X50		1			
131	JM00000460	TAPPING SCREW ST4.2X9.5		1			
132	JM00000459	POSITION LOCK LEVER		1			
133	JM00000457	POSITION SPRING PLATE		1			
134	JM23100041	FLAT WASHER 6		2			
135	JM23100151	SPRING WASHER 6		2			
136	JM00000458	HEX SOCKET HEAD BOLT M6X12		2	*		
136-1	JM00000604	PAN HEAD SCREW M6X12	<	2			

137	JM00000461	COMPRESSION SPRING 14.5X25		1			
138	JM00000462	FOOT BOLT M8X23		1			
139	JM00000463	GRIP BOLT M10X244		1			
140	JM00000432	VERTICAL VISE SET		1			
D10		INC. 141-146					
141	JM00000475	KNOB BOLT M10X128		1			
142	JM00000474	VISE ARM		1			
143	JM00000473	PRESSURE PLATE		1			
144	JM00000472	FLAT WASHER 4 XL		1			
145	JM23100015	SPRING WASHER 4		1			
146	JM23100033	PAN HEAD SCREW M4X12		1			
147	JM00000448	SUB FRNCE		1			
148	JM23580063	CAUTION LABEL		1			
149	JM00000449	KNOB BOLT M6X18		1			
150	JM00000450	HEX SOCKET HEAD BOLT M8X20		4			
151	JM23100061	SPRING WASHER 8		4			
152	JM23100060	FLAT WASHER 8		4			
153	JM00000447	RIP FENCE		1			
154	JM00000446	WRENCH HOLDER SLEEVE		1			
155	JM00000438	BASE COMP		1	*		
D10		INC. 156					
155-1	JM00000680	BASE COMP	<	1			
D10		INC. 156					
156	JM00000439	MITER SCALE LABEL		1			
157	JM00000444	KNOB BOLT M6X46		2			
158	JM23180056	CAUTION LABEL		1			
159	JM00000433	LEFT EXTENSION TABLE		1			
160	JM00000434	EXTENSION PIPE 10X210		4			
161	JM23100087	HEX SOCKET SET SCREW M6X8		4			
162	JM00000435	PAN HEAD SCREW M4X8		2			
163	JM00000442	RIGHT EXTENSION TABLE		1			
164	JM00000443	SET PLATE		1			
165	JM23100041	FLAT WASHER 6		1			
166	JM00000441	HEX. LOCK NUT M6		1			
167	JM00000074	PAN HEAD SCREW M6X20		1			
168	JM23100010	FLAT WASHER 10		1			
169	JM00000437	WAVE WASHER 10		1			
170	JM23100010	FLAT WASHER 10		1			
171	JM23100009	HEX LOCK NUT M10		1			
172	JM00000436	RUBBER FOOT		4			
A01	D-77344	TCT SAW BLADE FOR MITER SAW		1			
A02	JM00000445	UNI.HEX KEY WRENCH 6MM & P H2		1			