Model No.LS1040 MITER SAW 255MM

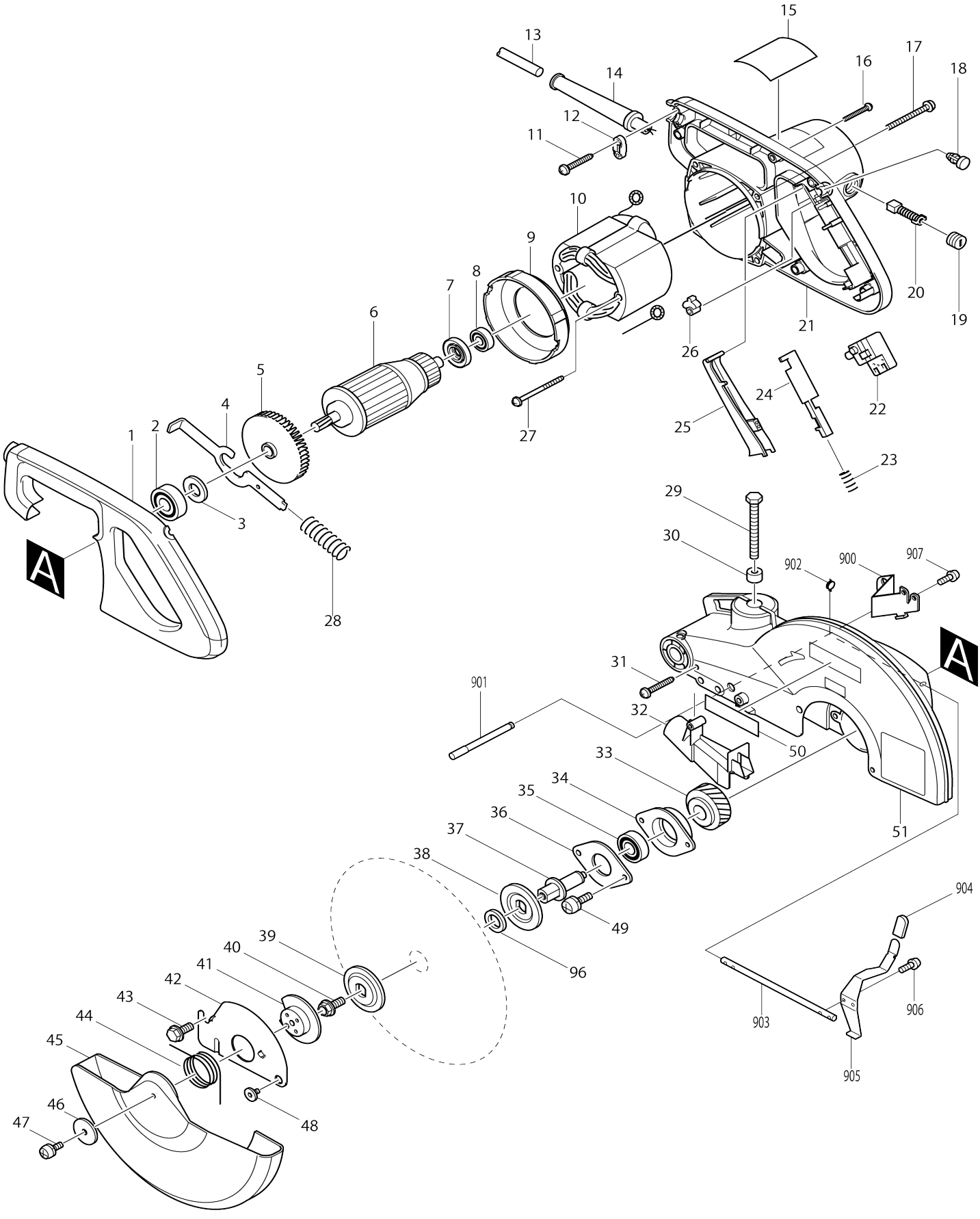

Model No.LS1040 MITER SAW 255MM

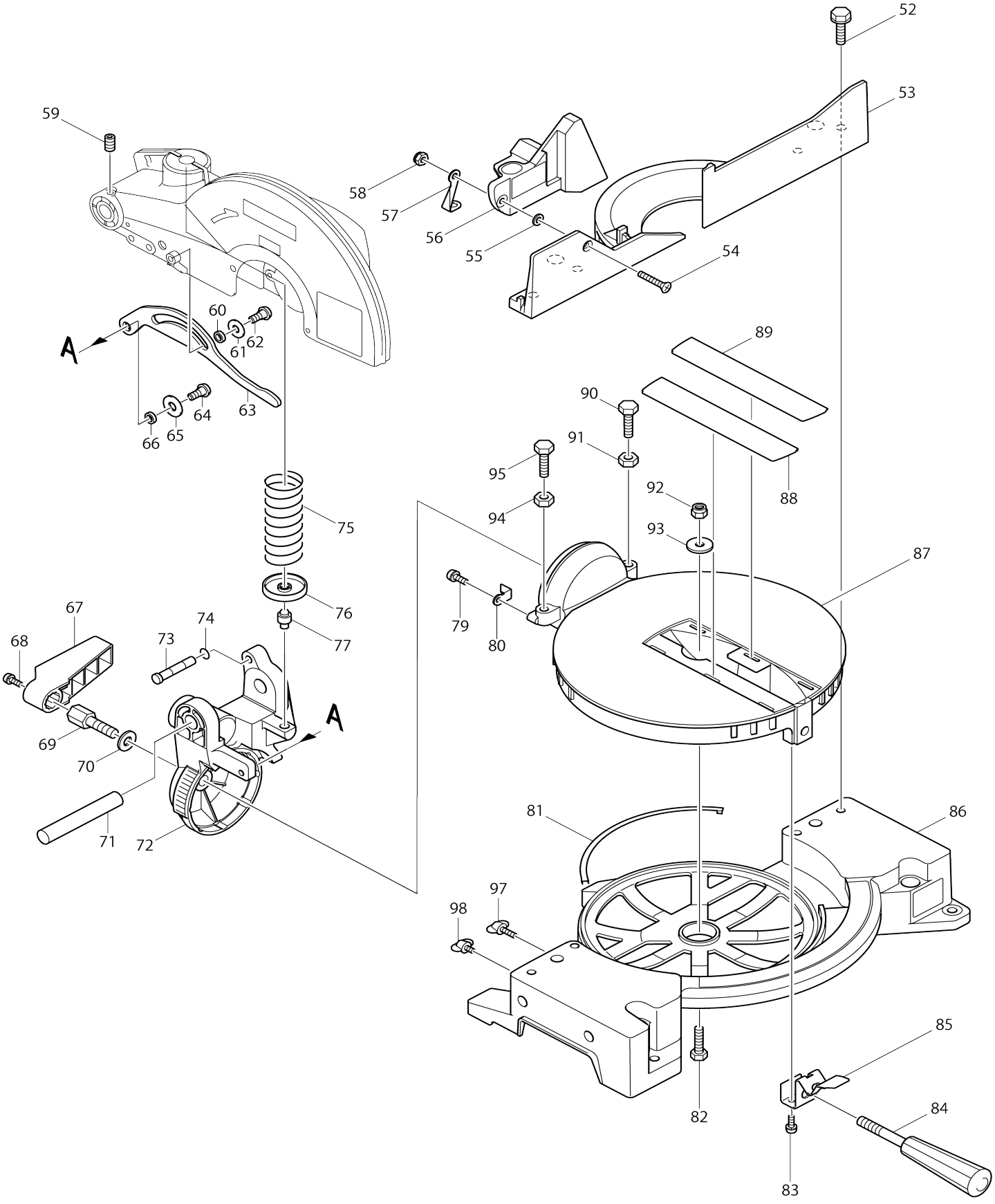

Model No.LS1040 MITER SAW 255MM

Item No.	Parts No.	Description	Interchangeability	Q'ty	New/ Old	Note1	Note2
001A	416004-6	Handle cover		1	*		
001-1A	458787-2	Handle cover	<	1			
001-1B	458787-2	Handle cover		1			
002	211206-7	Ball bearing 6202LLB		1			
003A	253853-8	Flat washer 15		1	*		
003-1A	267280-3	Flat washer 15	<	1			
003-1B	267280-3	Flat washer 15		1			
004	343641-2	Shaft lock		1			
005	241909-9	Fan 80		1			
006B	516718-8	Armature assembly 220V		1	*		
006B		INC. 2,3,5,7,8			*		
006-1B	516718-8	Armature assembly 220V	O	1			
006-1B		INC. 2,3,5,7,8					
006A_A	516718-8	Armature assembly 220V		1	*		
006A_A		INC. 2,3,5,7,8			*		
006A1A	516718-8	Armature assembly 220V	O	1			
006A1A		INC. 2,3,5,7,8					
007	681640-9	Insulation washer		1	*		
007-1	681640-9	Insulation washer	O	1			
008	211061-7	Ball bearing 6000LLB		1	*		
008-1	211097-6	Ball bearing 6000LLB	O	1			
009A_	416442-2	Baffle plate		1			
010A_B	526068-3	Field assembly 220-240V		1			
C10	654020-2	Ring terminal 36L		1			
C20	654502-4	Non-insulated splice		1			
010B_A	526068-3	Field assembly 220-240V		1			
C10	654020-2	Ring terminal 36L		1			
C20	654502-4	Non-insulated splice		1			
011	265995-6	Binding head tapping screw 4X18		2			
012A1B	687124-5	Strain relief		1			
012C_A	687063-9	Strain relief		1	*		
012C1A	687052-4	Strain relief	X	1	*		
012C2A	687124-5	Strain relief	O	1			
013C1B	665865-3	Power supply cord 1.0-2-2.5		1			
013E_	665865-3	Power supply cord 1.0-2-2.5		1			

A							
014A1B	682540-6	Cord guard 9.3-90		1	*		
014A2B	682574-9	Cord guard 10	O	1			
014B_A	682540-6	Cord guard 9.3-90		1	*		
014B1A	682574-9	Cord guard 10	O	1			
015A2A	851559-8	Name plate LS1040		1			
015A2B	855H16-6	Name plate LS1040		1			
016	265995-6	Binding head tapping screw 4X18		5			
017	911383-2	Pan head screw M6X60 WR		4			
018A	411478-6	Switch button		1	*		
018B	417113-4	Switch button		1			
018-1A	417113-4	Switch button	O	1			
019A	643650-4	Holder cap 6.5-13.5		2	*		
019-1A	643650-4	Holder cap 6.5-13.5	O	2			
019-1B	643650-4	Holder cap 6.5-13.5		2			
020A_	181044-0	Carbon brush 153		1	*		
020A1	194985-1	Carbon brush set	O	1			
021C2B	140H35-8	Motor housing complete		1			
C10	810964-8	Caution label		1			
C21	643536-2	Brush holder 6.5X13.5		2			
021D_A	150786-7	Motor housing complete		1	*		
C10	817882-1	Caution label		1	*		
C20	643660-1	Brush holder 6.5-13.5		2	*		
021D1A	153794-7	Motor housing complete	<	1	*		
C10	817882-1	Caution label		1	*		
C20	643660-1	Brush holder 6.5-13.5		2	*		
021D2A	154561-3	Motor housing complete	<	1			
C10	810964-8	Caution label		1			
C20	643660-1	Brush holder 6.5-13.5		2	*		
C21	643653-8	Brush holder 6.5X13.5	O	2	*		
C22	643536-2	Brush holder 6.5X13.5	O	2			
022	651923-1	Switch TG70B		1			
023	231457-6	Compression spring 3		1			
024	416000-4	Lock off lever		1			
025A	415999-0	Switch lever		1	*		
025B	459017-4	Switch lever		1			
025-1A	459017-4	Switch lever	<	1			
026	414546-4	Cam		1			
027	266029-8	Binding head tapping screw 5X65		2			
028	231297-2	Compression spring 9		1			
029	251667-9	Hex. head bolt M8X75		1			

030	262511-5	Rubber sleeve 6		1			
031	265995-6	Binding head tapping screw 4X18		1			
032A	416007-0	Guide cover		1	*		
032-1A	453695-2	Guide cover	<	1			
032-1B	453695-2	Guide cover		1			
033	226465-0	Helical gear 42		1			
034	316821-3	Bearing box		1			
035	211256-2	Ball bearing 6203LLB		1			
036	285685-5	Bearing retainer 64		1			
037	322865-3	Spindle		1			
038	224333-1	Flange 53		1			
039	224333-1	Flange 53		1			
040	265355-2	Hex. head flange bolt M8X20		1			
041	343639-9	Center plate		1			
042	344380-7	Center cover		1			
043	265324-3	Hex. head flange bolt M8X12		1			
044	231593-8	Torsion spring 36		1			
045	416003-8	Safety cover		1			
046	267136-0	Flat washer 5		1			
047A	911213-7	Pan head screw M5X12 WR		1	*		
047-1A	922211-6	Hex. socket head bolt M5X12 W	<	1			
047-1B	922211-6	Hex. socket head bolt M5X12 W		1			
048	265985-9	Hex. socket shoulder head bolt M6X9		1			
049	911223-4	Pan head screw M5X16 WR		2			
050A	819064-1	Makita logo label		1	*		
051B6B	140E51-2	Blade case complete		1			
C10	816847-0	Operation label		1			
C20	810968-0	Caution label		1			
C30	263005-3	Rubber pin 6		1			
051C_A	151490-1	Blade case complete		1	*		
C10	817667-5	Caution label		1	*		
C20	817879-0	Caution label		1	*		
C30	263005-3	Rubber pin 6		1	*		
051C1A	151490-1	Blade case complete	O	1	*		
C10	817667-5	Caution label		1	*		
C20	817879-0	Caution label		1	*		
C30	263005-3	Rubber pin 6		1	*		
051C2A	154560-5	Blade case complete	<	1	*		
C10	817667-5	Caution label		1	*		
C20	810968-0	Caution label		1	*		
C30	263005-3	Rubber pin 6		1	*		
051C3A	188330-0	Blade case set	O	1	*		
C10	817667-5	Caution label		1	*		
C20	810968-0	Caution label		1	*		

C30	263005-3	Rubber pin 6		1	*		
051C3A		INC.E22			*		
051C4A	188330-0	Blade case set	O	1	*		
C10	816847-0	Operation label	<	1	*		
C20	810968-0	Caution label		1	*		
C30	263005-3	Rubber pin 6		1	*		
051C4A		INC.E22			*		
051C5A	140655-0	Blade case complete	O	1	*		
C10	816847-0	Operation label		1	*		
C20	810968-0	Caution label		1	*		
C30	263005-3	Rubber pin 6		1	*		
051C6A	141570-1	Blade case complete	S	1			
C10	816847-0	Operation label		1			
C20	810968-0	Caution label		1			
C30	263005-3	Rubber pin 6		1			
052A	921451-3	Hex. head bolt M8X30 W		4	*		
052-1B	265488-3	Hex. head bolt M8X30		4			
053A	316826-3	Guide rule		1	*		
053-1A	316826-3	Guide rule	O	1	*		
053-2A	318847-1	Guide rule	<	1			
053-2B	318847-1	Guide rule		1			
054	912342-9	Countersunk head screw M6X25		1			
055	253715-0	Flat washer 6		1			
056A3B	142816-8	Sub fence complete		1			
C10	810967-2	Caution label		1			
056B_A	150760-5	Sub fence complete		1	*		
C10	810879-9	Caution label		1	*		
056B1A	150760-5	Sub fence complete	O	1	*		
C10	810879-9	Caution label		1	*		
056B2A	154559-0	Sub fence complete	<	1	*		
C10	810967-2	Caution label		1	*		
056B3A	142816-8	Sub fence complete	<	1			
C10	810967-2	Caution label		1			
057	344476-4	Sub fence plate		1			
058	252014-7	Hex. lock nut M6-10		1			
059	251961-9	Hex. socket set screw (flat point) M6X10		1			
060	257162-7	Ring 7		1			
061	253823-7	Flat washer 7		1			
062	265984-1	Hex. socket button head bolt M6 X14		1			
063	344377-6	Link plate		1			

064	265984-1	Hex. socket button head bolt M6 X14		1			
065	253823-7	Flat washer 7		1			
066	257162-7	Ring 7		1			
067	416006-2	Lever 100		1			
068	911113-1	Pan head screw M4X10 WR		1			
069	265437-0	Hex. head bolt M10		1			
070	253024-7	Flat washer 10		1			
071	256836-7	Rod 16		1			
072A	150664-1	Arm complete		1	*		
C10	816310-3	Scale label		1	*		
072-1A	150664-1	Arm complete	O	1	*		
C10	816310-3	Scale label		1	*		
072-2A	154463-3	Arm complete	O	1			
C10	816310-3	Scale label		1			
072-2B	154463-3	Arm complete		1			
C10	816310-3	Scale label		1			
073	322317-4	Stopper pin		1			
074	213021-5	O-ring 5		1			
075	233152-4	Compression spring 28		1			
076A	343638-1	Spring holder		1	*		
076-1A	344464-1	Spring holder	S	1			
076-1B	344464-1	Spring holder		1			
077A_A	256260-4	Pin 8		1	*		
077A1A	256280-8	Pin 8	S	1			
077A1B	256280-8	Pin 8		1			
079	911113-1	Pan head screw M4X10 WR		1			
080	344385-7	Pointer		1			
081	343799-7	Slide plate		3			
082	921452-1	Hex. head bolt M8X30		1			
083	911213-7	Pan head screw M5X12 WR		2			
084	273495-2	Grip 32		1			
085	344381-5	Knock spring		1			
086A2B	140H28-5	Base complete		1			
C10	816311-1	Miter scale plate		1			
C20	810965-6	Caution label		1			
C30	813L22-1	Caution label		2			
086B_A	150759-0	Base complete		1	*		
C10	816311-1	Miter scale plate		1	*		
C20	817283-3	Caution label		2	*		
C30	817839-2	Caution label		1	*		
086B1A	150759-0	Base complete	O	1	*		
C10	816311-1	Miter scale plate		1	*		
C20	817283-3	Caution label		2	*		

C30	817839-2	Caution label		1	*		
086B2A	154558-2	Base complete	<	1			
C10	816311-1	Miter scale plate		1			
C20	817283-3	Caution label		2			
C30	810965-6	Caution label		1			
087A	316824-7	Turn base		1	*		
087-1A	316824-7	Turn base	O	1			
087-1B	316824-7	Turn base		1			
088	416001-2	Kerf board		1			
089	416001-2	Kerf board		1			
090A	921452-1	Hex. head bolt M8X30		1	*		
090B	265455-8	Hex. head bolt M8X28		1			
090-1A	265455-8	Hex. head bolt M8X28	S	1			
091A	931402-8	Hex. nut M8		1	*		
092	252105-4	Hex. lock nut M8-13		1			
093-1	253762-1	Flat washer 8		1			
094A	931402-8	Hex. nut M8		1	*		
095A	921452-1	Hex. head bolt M8X30		1	*		
095B	265455-8	Hex. head bolt M8X28		1			
095-1A	265455-8	Hex. head bolt M8X28	S	1			
096A_A	257137-6	Ring 16		1	*		
096A1A	257262-3	Ring 16	O	1			
096A1B	257262-3	Ring 16		1			
097	251887-5	Thumb screw M6X10		1			
098A	265708-5	Thumb screw M6X20		2	*		
098-1A	911333-7	Pan head screw M6X20 WR	<	2			
098-1B	265708-5	Thumb screw M6X20		2			
900A	344572-8	Lock plate		1			
901A	323720-2	Lock pin 8		1	*		
901-1A	326176-8	Lock pin 8	S	1			
902A	231633-2	Torsion spring 10		1			
903A	323721-0	Rod 8		1			
904A	421589-9	Cap		1			
905A	344573-6	Lock lever		1	*		
905-1A	345803-8	Lock lever	S	1	*		
905-2A	346619-4	Lock lever	<	1			
906A	911113-1	Pan head screw M4X10 WR		2			
907A	911113-1	Pan head screw M4X10 WR		2			
908A	424018-1	Sub lever		1			
A01A	411478-6	Switch button		2	*		
A02	762001-3	Triangular rule		1			
A03	782212-4	Box wrench 13		1			
A04A	122523-9	Dust bag assembly		1	*		

C10	410602-8	Fastener		1	*		
A04-1 A	122852-0	Dust bag assembly	O	1			
C10	410602-8	Fastener		1			
A04-1 B	122852-0	Dust bag assembly		1			
C10	410602-8	Fastener		1			
A05A	122531-0	Sub plate assembly		1	*		
C10	252148-6	Square nut M8		1	*		
C20	921431-9	Hex. head bolt M8X20 W		1	*		
A05-1 A	193471-9	Sub plate set	O	1	*		
C10	252148-6	Square nut M8		1	*		
C20	921431-9	Hex. head bolt M8X20 W		1	*		
A05-2 A	195934-1	Sub plate set	<	1			
C10	252148-6	Square nut M8		1			
C20	921431-9	Hex. head bolt M8X20 W		1			
A05-2 B	193471-9	Sub plate set		1			
C10	252148-6	Square nut M8		1			
C20	921431-9	Hex. head bolt M8X20 W		1			
A06	122536-0	Vise assembly		1			
C10	251370-2	Pan head shoulder screw M5X15. 5		1			
C20	251887-5	Thumb screw M6X10		1			
C30	253804-1	Flat washer 6		1			
C40	271286-5	Knob 40		1			
C50	316938-2	Vise arm		1			
C60	322313-2	Vise rod		1			
C70	343651-9	Vise plate		1			
A07	257022-3	Ring 16		1			
A08A	322312-4	Holder		2	*		
A08-1 A	123101-8	Holder assembly	<	2			
C10	286212-1	Cap 20		4			
C20	326182-3	Holder		2			
C30	332036-4	Adjuster		4			
A08-1 B	322312-4	Holder		2			
A09B	A-80961	T.C.T.SAW BLADE 255X32X30		1			
B01B	192621-3	Holder set		1			
B01B		INC. 098,A08					
E02B	645105-5	Noise suppressor		1			
E02A_ A	645105-5	Noise suppressor		1			
E05	651941-9	Switch V-15-2A5		1			
E13A	817926-7	Caution label		1	*		
E18A	A-80961	T.C.T.SAW BLADE 255X32X30		1			
E19	646073-5	Choke coil		1			
E22A	819064-1	Makita logo label		1	*		
E22-1 A	819214-8	Makita logo label	X	1	*		
F01	192622-1	Crown molding stopper set		0			

F20	193471-9	Sub plate set		1			
F21-1	198688-9	Stand set	<	1			
F55-3	198687-1	Stand set	<	1			

Please state Parts No. when your order.

Print Date 09/22/2025