Model No.LS002G Cordless Slide Compound Miter Saw

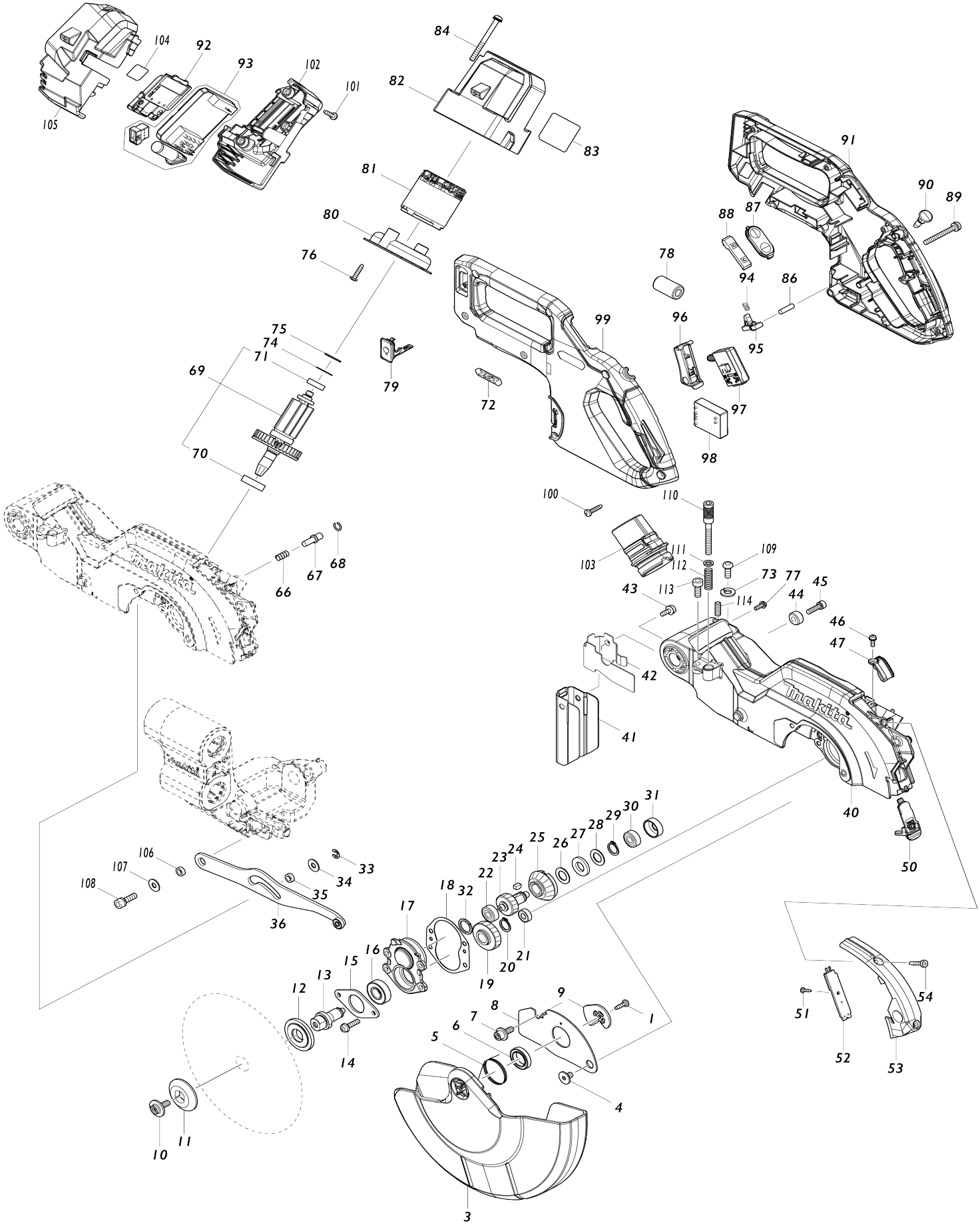

Model No.LS002G Cordless Slide Compound Miter Saw

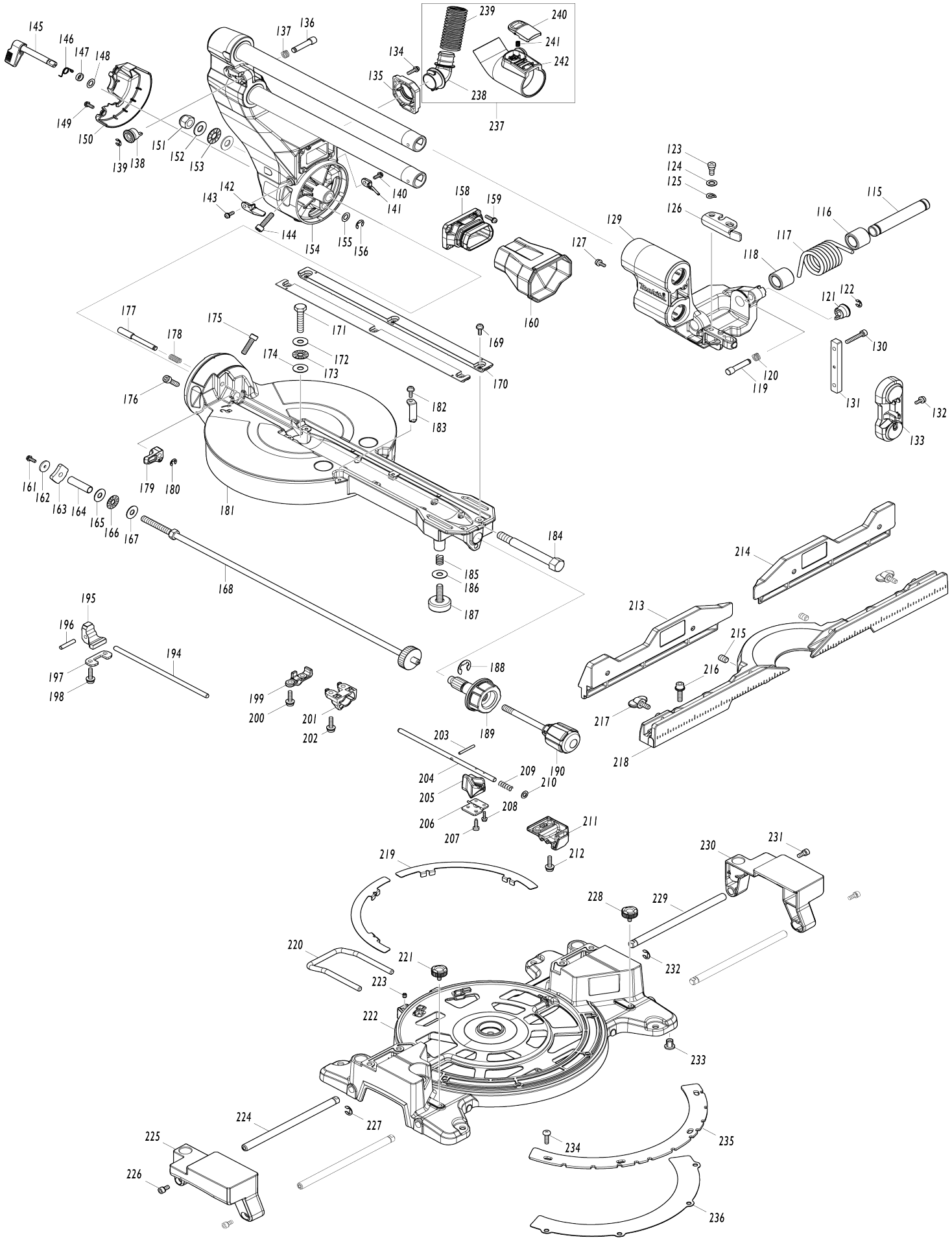

Model No.LS002G Cordless Slide Compound Miter Saw

Item No.	Parts No.	Description	Interchangeability	Q'ty	New/ Old	Note1	Note2
001	266192-7	Binding head tapping screw 4X14		1	*		
001-1	266385-6	Binding head tapping screw 4X14	O	1			
003	412933-1	Safety cover		1	*		
003-1	412933-1	Safety cover	O	1			
004	265985-9	Hex. socket shoulder head bolt M6X9		1			
005	232311-7	Torsion spring 30		1			
006	210150-5	Ball bearing 6803DDW		1	*		
006-1	210322-2	Ball bearing 6803DDW	O	1			
007	266732-1	Hex. socket head bolt M6X16		1			
008	347731-3	Center cover		1			
009	347059-9	Center plate		1			
010	266733-9	Hex. socket head flange bolt M6X16		1			
011	224275-9	Outer flange 40		1			
012	224614-3	Inner flange 40		1			
013	327697-3	Spindle		1			
014	911233-1	Pan head screw M5X20 WR		4			
015	285043-5	Bearing retainer 52		1			
016	211131-2	Ball bearing 6001DDW		1			
017	312A44-7	Bearing box		1			
018	422652-1	Gasket		1			
019	227838-0	Helical gear 43		1			
020	961052-5	Retaining ring (EXT) S-12		1			
021	210006-2	Ball bearing 696ZZ		1			
022	211021-9	Ball bearing 607LLB		1			
023	227837-2	Helical gear 30		1			
024	254011-9	Woodruff key 4		1			
025	227836-4	Spiral bevel gear 33		1			
026	253744-3	Flat washer 12		1			
027	261104-5	Rubber washer 12		1			
028	253744-3	Flat washer 12		1			
029	961052-5	Retaining ring (EXT) S-12		1			
030	211021-9	Ball bearing 607LLB		1			
031	424605-6	Rubber ring 19		1			
032	261153-2	Urethane washer 15		1			
033	961018-5	Stop ring (EXT) E-5		1			
034	253804-1	Flat washer 6		1			
035	257163-5	Ring 6		1			
036	140W98-4	Link plate complete		1			
040	140W84-5	Blade case complete		1			
C10	263002-9	Rubber pin 4		3			
C20	422724-2	Cushion		1			
C30	322316-6	Link shaft 6		1			
041	422651-3	Guard		1	*		
041-1	422D19-7	Guard	<	1			
042	345438-5	Guard plate		1			

043	911119-9	Pan head screw M4X12 WG		1			
044	257785-1	Sleeve 6		1			
045	922226-3	Hex. socket head bolt M5X18 W		1			
046	911118-1	Pan head screw M4X12 WR		1			
047	458075-7	Lead cover		1			
050	140X03-7	Lens complete		1			
051	266421-8	Binding head tapping screw 3X10		1			
052	620E07-6	LED circuit		1			
053	141A59-5	LED cover complete		1			
C10	8024V4-4	Caution label		1			
C20	931102-0	Hex. nut M4		1			
054	266034-5	Binding head tapping screw 4X16		2			
066	231240-1	Compression spring 7		1			
067	256633-1	Collar HD. pin 6		1			
068	231928-3	Ring spring 8		1			
069	519649-0	Rotor assembly		1			
069		INC. 70,71					
070	211131-2	Ball bearing 6001DDW		1			
071	210017-7	Ball bearing 607DDW		1			
072	8024V5-2	XGT logo label		1			
073	942151-2	Spring washer 6		1			
074	253842-3	Flat washer 14		1			
075	261153-2	Urethane washer 15		1			
076	265995-6	Binding head tapping screw 4X18		2			
077	911118-1	Pan head screw M4X12 WR		1			
078	688162-0	Line filter		1	*		
079	140F99-0	Cap complete		1			
C10	213218-6	O-ring 16		1	*		
C11	213A05-9	O-ring 16	O	1			
C20	818H07-8	Cap label		1			
080	459933-0	Baffle plate		1			
081	629A26-5	Stator		1	*		
081-1	629C14-4	Stator	S	1			
082	412926-8	Motor housing		1			
083	858A05-8	Name plate LS002G		1			
084	911278-9	Pan head screw M5X55 WR		4			
086	256123-4	Pin 5		1			
087	140X02-9	Switch plate complete		1			
C10	8024V3-6	Switch label		1			
088	631973-2	Switch unit		1			
089	911268-2	Pan head screw M5X45 WR		1			
090	417113-4	Switch button		1			
091	183R96-5	Handle set		1			
091		INC. 99					
092	632P64-8	Terminal unit		1			
093	620E06-8	Controller		1	*		
093-1	620R73-1	Controller	S	1			
094	231026-3	Compression spring 4		1			
095	416533-9	Lock off lever		1			

096	459966-5	Switch lever		1			
097	651083-9	Switch C3XA-1PSPM		1			
098	620E08-4	Power supply circuit		1			
099	183R96-5	Handle set		1			
099		INC. 91					
100	265995-6	Binding head tapping screw 4X18		6			
101	265995-6	Binding head tapping screw 4X18		3			
102	183R92-3	Battery housing set		1			
C10	263005-3	Rubber pin 6		2			
102		INC. 105					
103	459250-8	Dust nozzle		1			
104	858A11-3	Serial No. label LS002G		1			
105	183R92-3	Battery housing set		1			
C10	263005-3	Rubber pin 6		2			
105		INC. 102					
106	257163-5	Ring 6		1			
107	253804-1	Flat washer 6		1			
108	922331-6	Hex. socket head bolt M6X20 W		1			
109	265484-1	Hex. socket button head bolt M6X17		1			
110	265B58-0	Hex. socket head bolt M6X45		1			
111	941152-7	Flat washer 6		1			
112	233343-7	Compression spring 7		1			
113	266757-5	Hex. socket head bolt M6X16		1			
114	266321-2	Hex. socket set screw (flat point) M6X16		1			
115	327710-7	Rod 16		1			
116	416905-8	Sleeve 17-23		1			
117	231685-3	Torsion spring 29		1	*		
117-1	232772-1	Torsion spring 29	<	1			
118	416905-8	Sleeve 17-23		1			
119	327702-6	Lock pin 7-9		1			
120	234316-3	Compression spring 7		1			
121	271428-1	Knob 20		1			
122	961018-5	Stop ring (EXT) E-5		1			
123	251267-5	Pan head shoulder screw M6		1			
124	253215-0	Flat washer 8		1			
125	253948-7	Wave washer 8		1			
126	344643-1	Stopper arm		1			
127	911119-9	Pan head screw M4X12 WG		2			
129	140W83-7	Front arm complete		1	*		
C10	263005-3	Rubber pin 6		2	*		
129-1	1410J3-6	Front arm complete	O	1			
C10	263005-3	Rubber pin 6		2			
130	922251-4	Hex. socket head bolt M5X30 W		2			
131	327705-0	Square rod		1			
132	911118-1	Pan head screw M4X12 WR		1			
133	412938-1	Rail holder		1			
134	911128-8	Pan head screw M4X16 WR		2			
135	412947-0	Inlet		1			
136	327702-6	Lock pin 7-9		1			

137	234316-3	Compression spring 7		1			
138	271428-1	Knob 20		1			
139	961018-5	Stop ring (EXT) E-5		1			
140	911118-1	Pan head screw M4X12 WR		1			
141	412943-8	Indication plate R		1			
142	412942-0	Indication plate L		1			
143	911118-1	Pan head screw M4X12 WR		1			
144	251582-7	Hex. socket head bolt M6X25		1			
145	271466-3	Lever 30		1			
146	232651-3	Torsion spring 8		1			
147	257848-3	Ring 8		1			
148	253215-0	Flat washer 8		1			
149	911118-1	Pan head screw M4X12 WR		2			
150	412934-9	Arm cover		1	*		
150-1	141G28-2	Arm cover complete	S	1			
C10	8024V1-0	Indication label	S	1			
151	252130-5	Hex. lock nut M10-17		1			
152	253024-7	Flat washer 10		2			
153	216413-7	Thrust needle cage 1024		1			
154	140W82-9	Arm complete		1	*		
C10	8024V1-0	Indication label		1	*		
154-1	141F27-8	Arm complete	S	1			
155	253215-0	Flat washer 8		1			
156	961013-5	Stop ring (EXT) E-7		1			
158	412944-6	Dust guide holder		1			
159	911128-8	Pan head screw M4X16 WR		4			
160	422648-2	Dust guide		1			
161	911118-1	Pan head screw M4X12 WR		1			
162	253400-5	Flat washer 4		1			
163	347759-1	Lock plate		1			
164	257849-1	Sleeve 8		1			
165	253731-2	Flat washer 8		1			
166	216415-3	Thrust needle cage 821		1			
167	253731-2	Flat washer 8		1			
168	162942-7	Lock shaft complete		1			
169	911119-9	Pan head screw M4X12 WG		6			
170	412940-4	Kerf board		2	*		
170-1	413C45-1	Kerf board	O	2			
171	265442-7	Hex. head bolt M8X40		1			
172	253731-2	Flat washer 8		1			
173	216415-3	Thrust needle cage 821		1			
174	253731-2	Flat washer 8		1			
175	251582-7	Hex. socket head bolt M6X25		1			
176	251582-7	Hex. socket head bolt M6X25		1			
177	327704-2	Stopper rod		1			
178	234122-6	Compression spring 6		1			
179	271465-5	Lever 24		1			
180	961018-5	Stop ring (EXT) E-5		1			
181	140W81-1	Turn base complete		1			
C10	8024U7-1	Bevel scale label		1			
C20	8024U8-9	Indication label		1			

C30	812X85-6	Caution label		1			
C40	813L22-1	Caution label		2			
182	911119-9	Pan head screw M4X12 WG		1			
183	459928-3	Indication plate		1			
184	327698-1	Center shaft		1			
185	231418-6	Compression spring 9		1			
186	253731-2	Flat washer 8		1			
187	266432-3	Adjust bolt M8X27		1			
188	961062-2	Stop ring (EXT) E-12		1			
189	271464-7	Grip 46		1			
190	271463-9	Grip 38		1			
194	327700-0	Lock rod 6		1			
195	313326-4	Turn stopper		1			
196	256186-0	Pin 5		1			
197	347601-6	Stopper holder		1			
198	911233-1	Pan head screw M5X20 WR		2			
199	312A46-3	Pin holder		1			
200	911233-1	Pan head screw M5X20 WR		2			
201	412941-2	Lead block		1			
202	911233-1	Pan head screw M5X20 WR		2			
203	256267-0	Pin 3		1			
204	327701-8	Lock pin 6		1			
205	412939-9	Lever 38		1			
206	347760-6	Lever plate		1			
207	266192-7	Binding head tapping screw 4X14		1	*		
207-1	266385-6	Binding head tapping screw 4X14	O	1			
208	911013-5	Pan head screw M3X10 WR		2			
209	233201-7	Compression spring 6		1			
210	941152-7	Flat washer 6		1			
211	312A45-5	Gear cover		1			
212	911233-1	Pan head screw M5X20 WR		2			
213	140W85-3	Upper fence L complete		1			
C10	810503-4	Caution label		1			
214	140W86-1	Upper fence R complete		1			
C10	810503-4	Caution label		1			
215	266089-0	Hex. socket set screw (flat point) M8X12		2	*		
215-1	265C19-6	Hex. socket set screw (flat point) M8X12	<	2			
216	922344-7	Hex. socket head bolt M6X25 WG		4			
217	265701-9	Thumb screw M6X14		2			
218	312A38-2	Guide fence		1			
219	347758-3	Slide plate		2			
220	327706-8	Base supporter		1			
221	265785-7	Thumb screw M5X10		1			
222	140W80-3	Base complete		1			
C10	810486-8	Caution label		1			
223	266264-8	Hex. socket set screw (flat point) M5X6		1			
224	327703-4	Rod 10		2			
225	312A42-1	Sub base L		1			

226	922211-6	Hex. socket head bolt M5X12 W		2			
227	961013-5	Stop ring (EXT) E-7		1			
228	265785-7	Thumb screw M5X10		1			
229	327703-4	Rod 10		2			
230	312A43-9	Sub base R		1			
231	922211-6	Hex. socket head bolt M5X12 W		2			
232	961013-5	Stop ring (EXT) E-7		1			
233	286044-6	Cap 13		4			
234	251546-1	Pan head shoulder screw M5		4			
235	347756-7	Miter scale plate		1			
236	347757-5	Miter lock plate		1			
237	127692-1	Dust nozzle assembly		1			
237		INC. 238-242					
238	412945-4	Hose connector		1	*		
239	245062-3	Hose 20-0.4		1			
240	458939-5	Button A		1			
241	232485-4	Compression spring 5		1			
242	412946-2	Hose joint		1	*		
243	620N49-4	Controller B	S	1			
244	652119-7	Pan head screw M2X6	S	6			
A01	127693-9	Vise assembly		1			
C10	312A56-0	Vise arm		1			
C20	265785-7	Thumb screw M5X10		1			
C30	327707-6	Vise rod		1			
C40	265B61-1	Thumb screw M10X70		1			
C50	253804-1	Flat washer 6		1			
C60	343651-9	Vise plate		1			
C70	251370-2	Pan head shoulder screw M5X15.5		1			
A02	127512-9	Dust bag assembly		1			
C10	412411-1	Fastener		1			
A03	762001-3	Triangular rule		1			
A04	198900-7	Wireless unit set		1	*		
A04-1	198900-7	Wireless unit set	<	1	*		
A04-2	198900-7	Wireless unit set	<	1	*		
A04-3	198900-7	Wireless unit set	O	1	*		
A04-4	198900-7	Wireless unit set	<	1			
A05	783022-2	Hex. wrench 5		1			
A06	E-06987	EFFICUT FOR WOOD CUTTING/ EN		1			
F03	198687-1	Stand set		1			
F04	198688-9	Stand set		1			