Model No.LM004G Cordless Lawn Mower

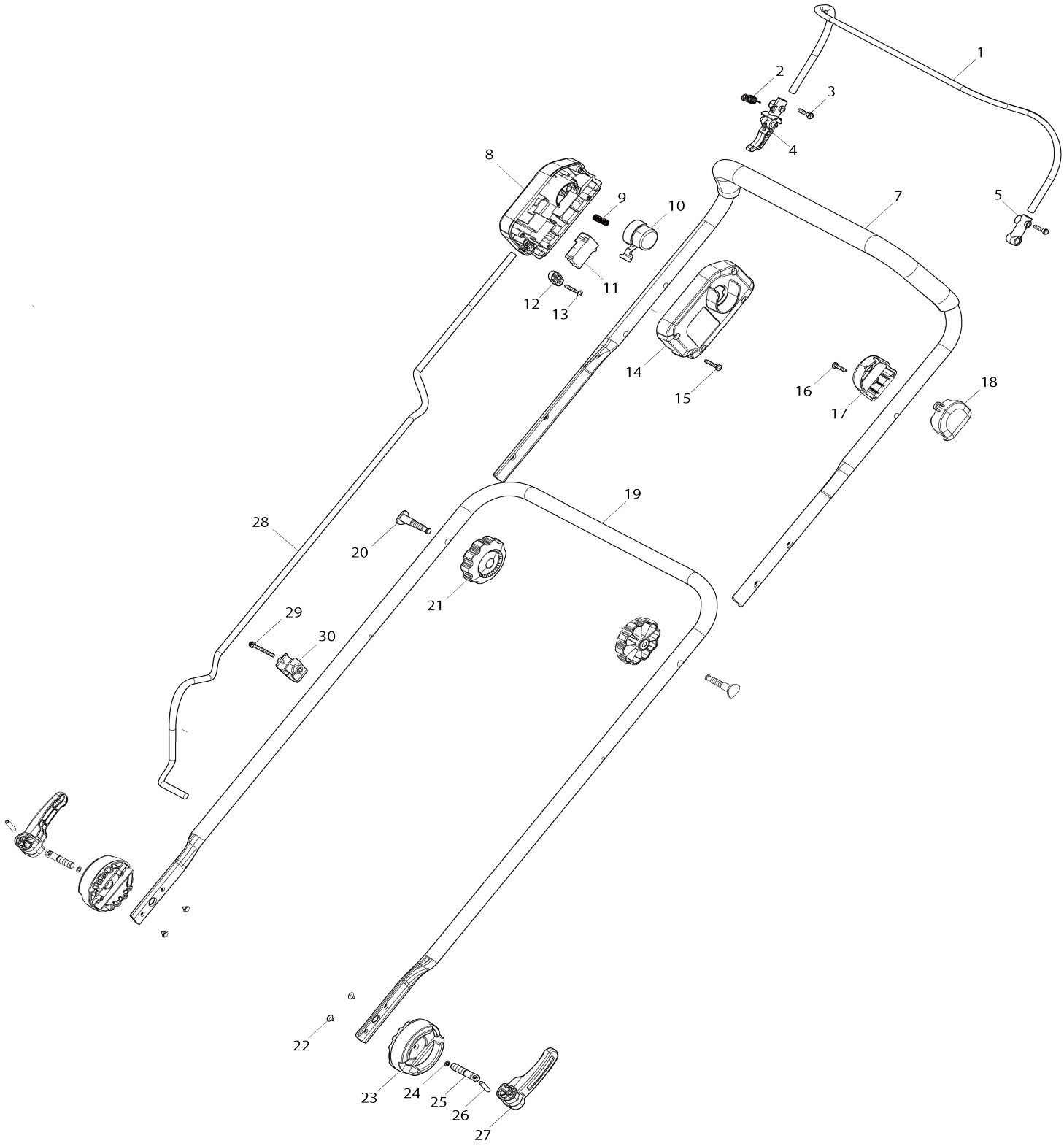

Model No.LM004G Cordless Lawn Mower

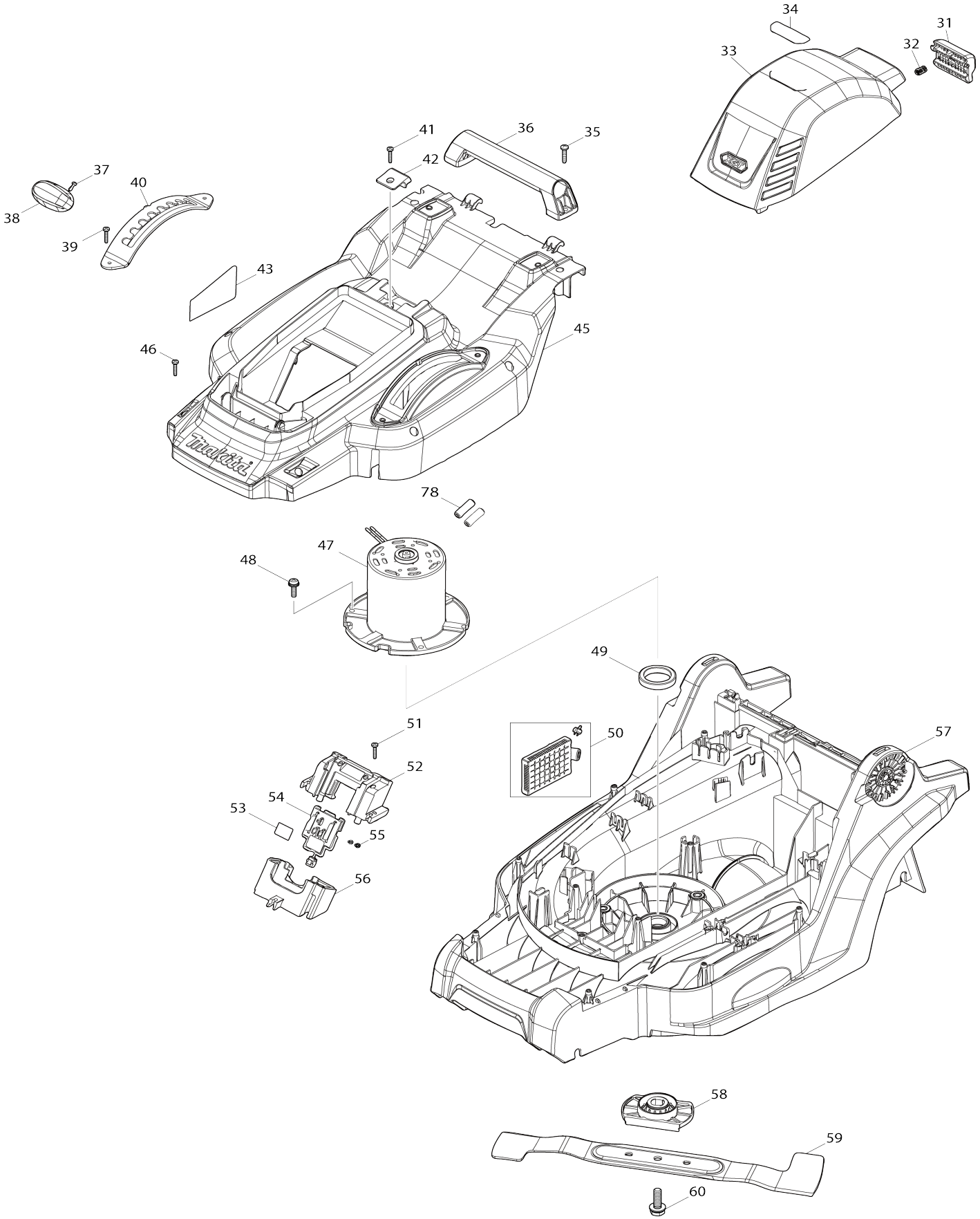

Model No.LM004G Cordless Lawn Mower

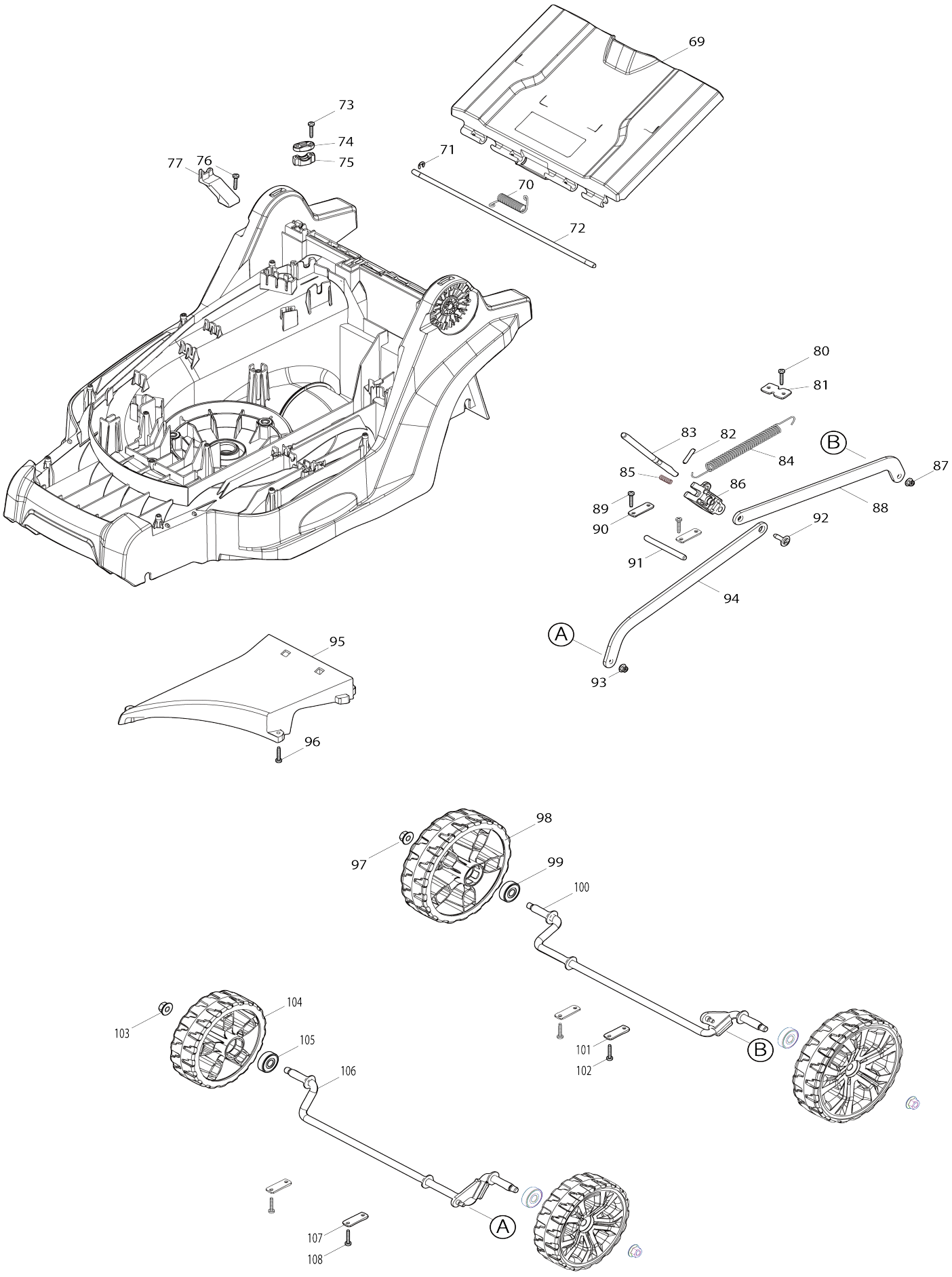

Model No.LM004G Cordless Lawn Mower

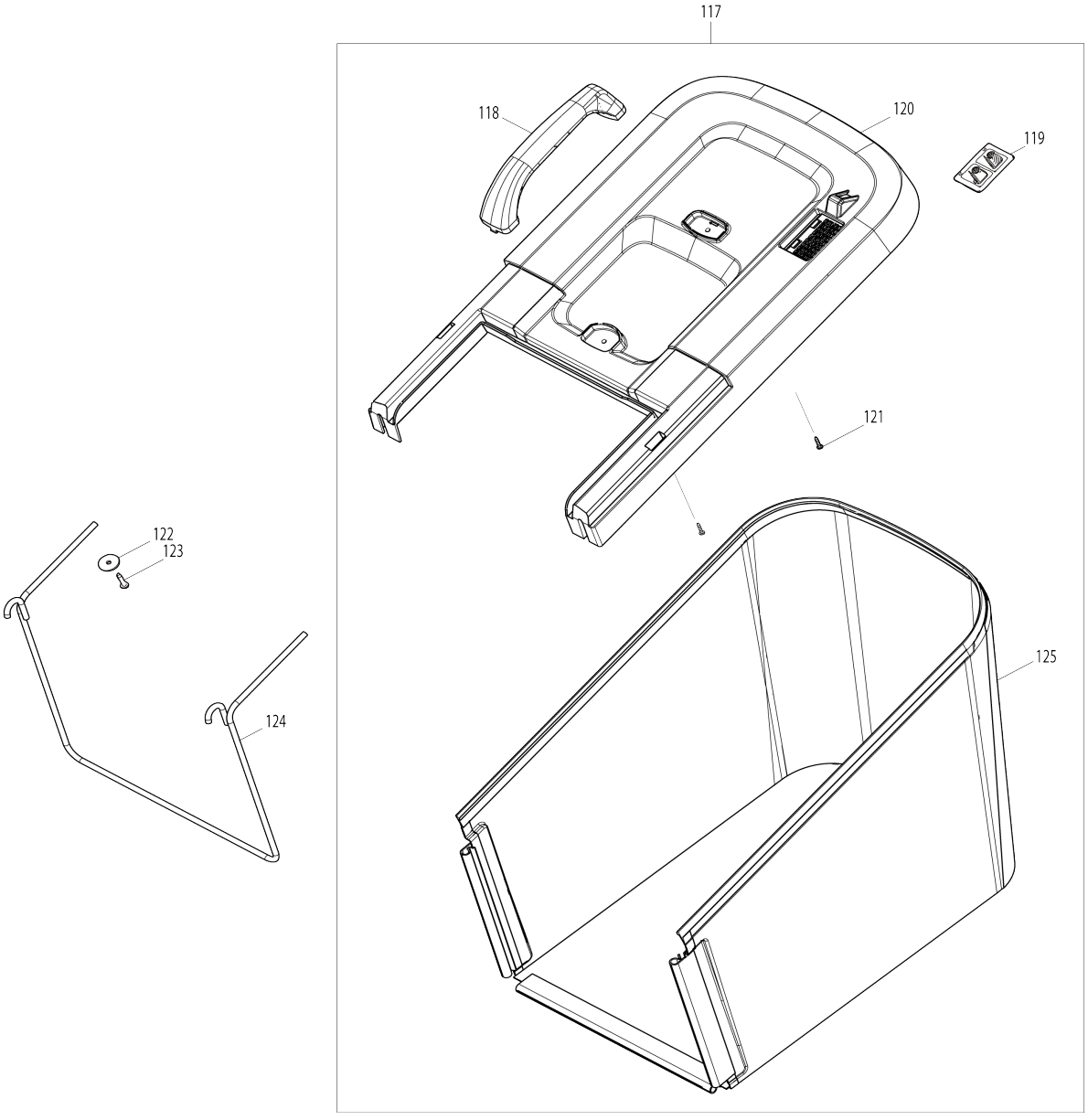

Model No.LM004G Cordless Lawn Mower

Item No.	Parts No.	Description	Interchangeability	Q'ty	New/ Old	Note1	Note2
001	327C33-1	Switch lever		1			
002	232814-1	Tension spring 7		1			
003	911138-5	Pan head screw M4X20 WR		2			
004	455075-8	Lever		1			
005	455078-2	Arm		1			
007	141T11-7	Upper pipe complete		1			
008	1830C3-1	Switch box set		1			
C10	8053U7-4	Indication label		1			
008		INC. 14					
009	233068-3	Compression spring 6		1			
010	455074-0	Switch button		1			
011	650041-2	Switch TG772BDS-1		1			
012	687124-5	Strain relief		1			
013	265999-8	Binding head tapping screw 4X25		2			
014	1830C3-1	Switch box set		1			
C10	8053U7-4	Indication label		1			
014		INC. 8					
015	266424-2	Binding head tapping screw 4X20		4			
016	266326-2	Binding head tapping screw 4X18		1			
017	456352-1	Switch lever case cover		1			
018	456351-3	Switch lever case		1			
019	327C35-7	Lower pipe		1			
020	265C08-1	Flat head bolt M8X50		2			
021	265C06-5	Thumb nut M8		2			
022	265B81-5	Flange tapping screw 3X6		4			
023	413T46-1	Support		2			
024	213877-6	O-ring 6		2			
025	327C36-5	Lock pin		2			
026	951119-7	Spring pin 4-24		2			
027	413T47-9	Lever		2			
028	699230-4	Power supply cord unit		1			
029	911163-6	Pan head screw M4X35 WR		1			
030	413944-9	Clamp		1			
C10	931102-0	Hex. nut M4		1			
031	413B03-1	Lock lever		1			
032	231037-8	Compression spring 7		1			
033	141T10-9	Battery cover complete		1			
034	8071M9-8	Indication label		1			
035	266459-3	Binding head tapping screw 5X25		2			
036	273675-0	Grip A		1			
037	266816-5	Pan head screw M3X12 WR		2			
038	413939-2	Height adjust lever grip		1			
039	266424-2	Binding head tapping screw 4X20		2			
040	162C76-4	Height adjust plate		1			

041	266424-2	Binding head tapping screw 4X20		1			
042	413T52-6	Hook		1			
043	8142C5-5	Name plate LM004G		1			
045	137035-9	Cowling assembly		1			
046	266424-2	Binding head tapping screw 4X20		8			
047	629C41-1	DC motor		1	*		
047-1	629C41-1	DC motor	O	1			
048	265A53-4	Pan head screw M6X22 WR		3			
049	688238-3	Line filter		1			
050	620M32-5	Controller		1			
051	266424-2	Binding head tapping screw 4X20		3			
052	1830A2-9	Terminal housing set		1			
C10	263005-3	Rubber pin 6		2			
052		INC. 56					
053	8142D1-0	Serial No. label LM004G		1			
054	632T08-2	Terminal unit		1	*		
054-1	632W79-7	TERMINAL UNIT	<	1			
055	652031-1	Pan head screw M3X6		2			
056	1830A2-9	Terminal housing set		1			
C10	263005-3	Rubber pin 6		2			
056		INC. 52					
057	413T55-0	Deck		1			
C10	347B63-0	Plate nut M8		2			
058	413T45-3	Blade support		1			
059	1913H4-8	Blade 430 set		1			
060	265A69-9	Hex. head bolt M10X35 WG		1	*		
060-1	265D72-8	Hex. head bolt M10X35 WG	<	1			
069	141T62-0	Rear flap complete		1			
C10	8054C4-0	Caution label		1			
070	233597-6	Torsion spring 8		1			
071	961018-5	Stop ring (EXT) E-5		1			
072	327C38-1	Rod 6		1			
073	266424-2	Binding head tapping screw 4X20		2			
074	687124-5	Strain relief		1			
075	687051-6	Strain relief		1			
076	266424-2	Binding head tapping screw 4X20		1			
077	413T62-3	LED holder		1			
078	688165-4	Line filter		2			
080	266424-2	Binding head tapping screw 4X20		2			
081	347870-9	Hook plate		1			
082	951119-7	Spring pin 4-24		1			
083	327C32-3	Height adjust lever		1			
084	232815-9	Tension spring 12		1			
085	232430-9	Compression spring 5		1			
086	413T51-8	Rod holder		1			
087	252286-4	Collared hex. lock nut M5-8		1			
088	347B65-6	Connecting rod R		1			

089	266424-2	Binding head tapping screw 4X20		4			
090	347869-4	Plate		2			
091	256A45-4	Rod 7		1			
092	265C05-7	Flange tapping screw 5X20		1			
093	252286-4	Collared hex. lock nut M5-8		1			
094	347B64-8	Connecting rod F		1			
095	413T58-4	Under cover		1			
096	266424-2	Binding head tapping screw 4X20		4			
097	252145-2	Collared hex. nut M8		2			
098	413U87-3	Rear wheel		2			
099	210070-3	Ball bearing 6200ZZ		2			
100	162C78-0	Rear shaft		1			
101	347869-4	Plate		2			
102	266424-2	Binding head tapping screw 4X20		4			
103	252145-2	Collared hex. nut M8		2			
104	413U86-5	Front wheel		2			
105	210070-3	Ball bearing 6200ZZ		2			
106	162C77-2	Front shaft		1			
107	347869-4	Plate		2			
108	266424-2	Binding head tapping screw 4X20		4			
117	122F56-0	Rear bag assembly		1	*		
117		118-121,125 ₩			*		
117-1	122H78-2	REAR BAG ASSEMBLY	S	1			
117-1		118-121,125 ₩					
118	413T48-7	Grip		1			
119	459806-7	Indicator M		1			
120	413T59-2	Rear bag cover		1	*		
120-1	4132D0-5	REAR BAG COVER	S	1			
121	266424-2	Binding head tapping screw 4X20		2			
122	267438-4	Flat washer 5		2	*		
123	266424-2	Binding head tapping screw 4X20		2	*		
123-1	265E19-8	HEX. SOCKET HEAD BOLT M4X12	X	2			
124	327C34-9	Rear bag rod		1			
125	162C79-8	Rear bag		1	*		
125-1	162D78-6	REAR BAG	O	1			
A01	1913H8-0	Mulching plug 430 set		1			
A02	782210-8	Box wrench		1			
A03	412393-7	Battery cover		1			
A04B	***DC40WB	DC40WB CHARGER		1			
A04C	***DC40RC	DC40RC FAST CHARGER		1			
A04C		COMPO-PARTS					
A05	191B26-6	Battery BL4040 set		1			
A06	783201-2	Hex. wrench 3		1			
E01	800A17-7	Sound 94dB label		1			
F01	1913H4-8	Blade 430 set		1			
F02	1913H6-4	Mulching blade 430 set		1			
F03	1913H8-0	Mulching plug 430 set		1			