Model No.LM003J Cordless Lawn Mower

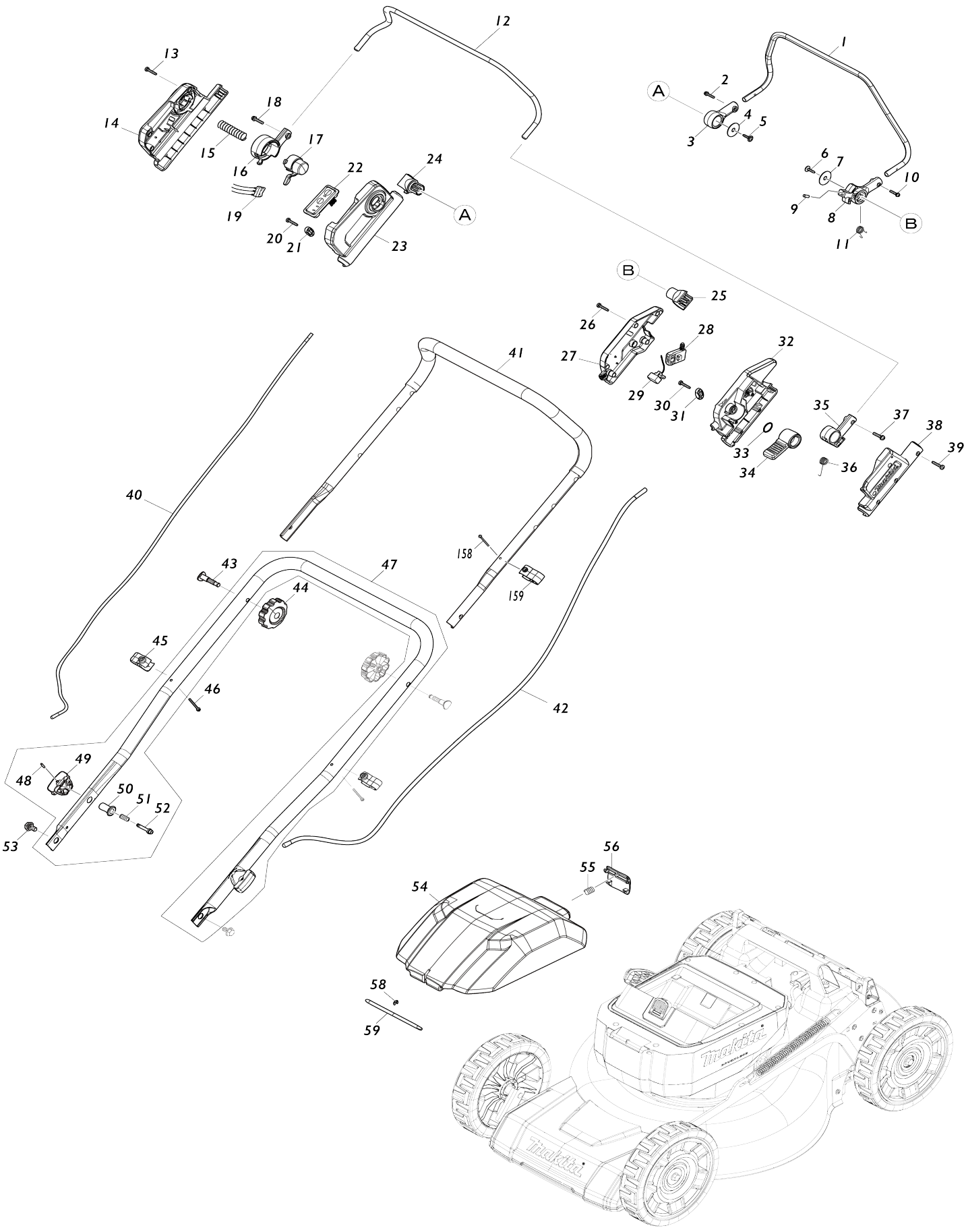

Model No.LM003J Cordless Lawn Mower

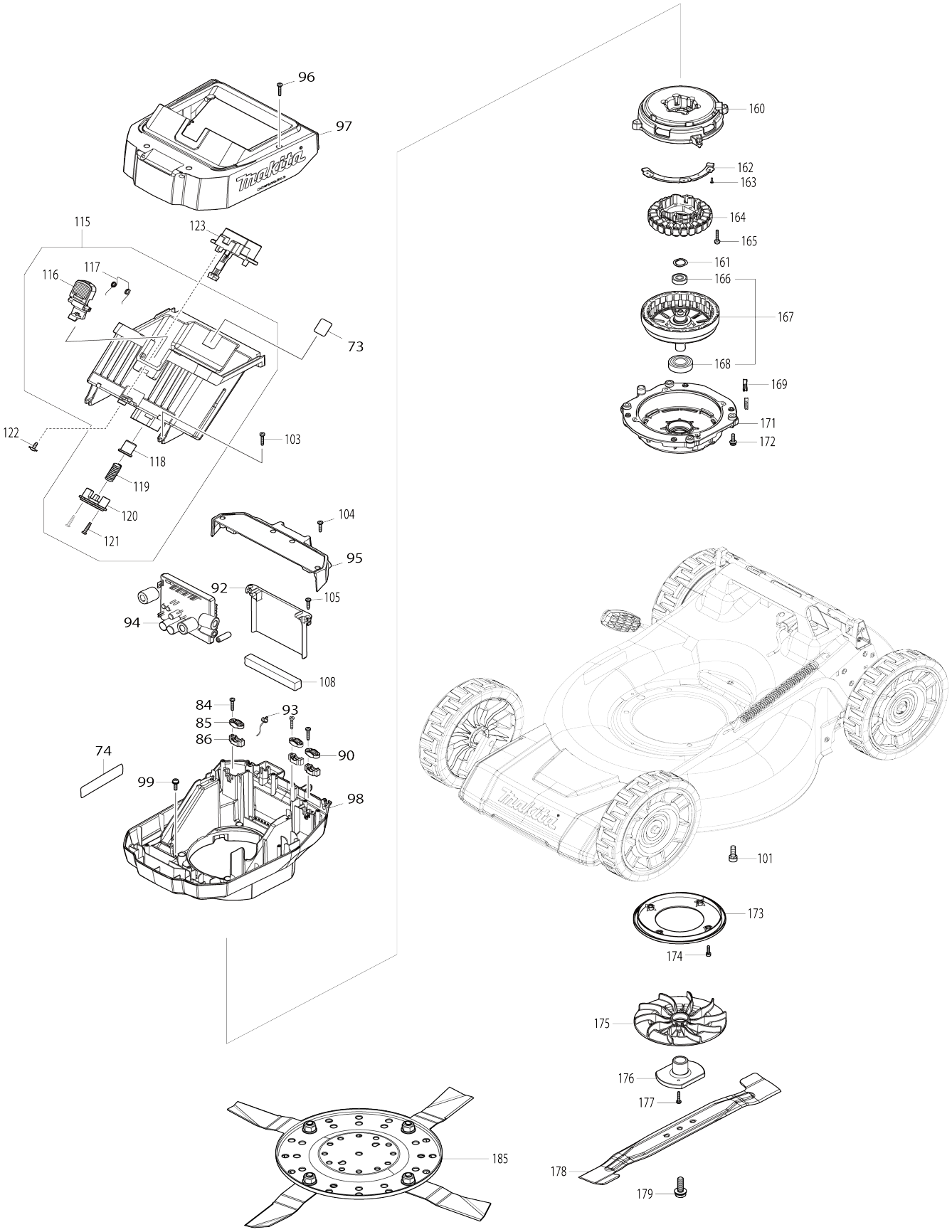

Model No.LM003J Cordless Lawn Mower

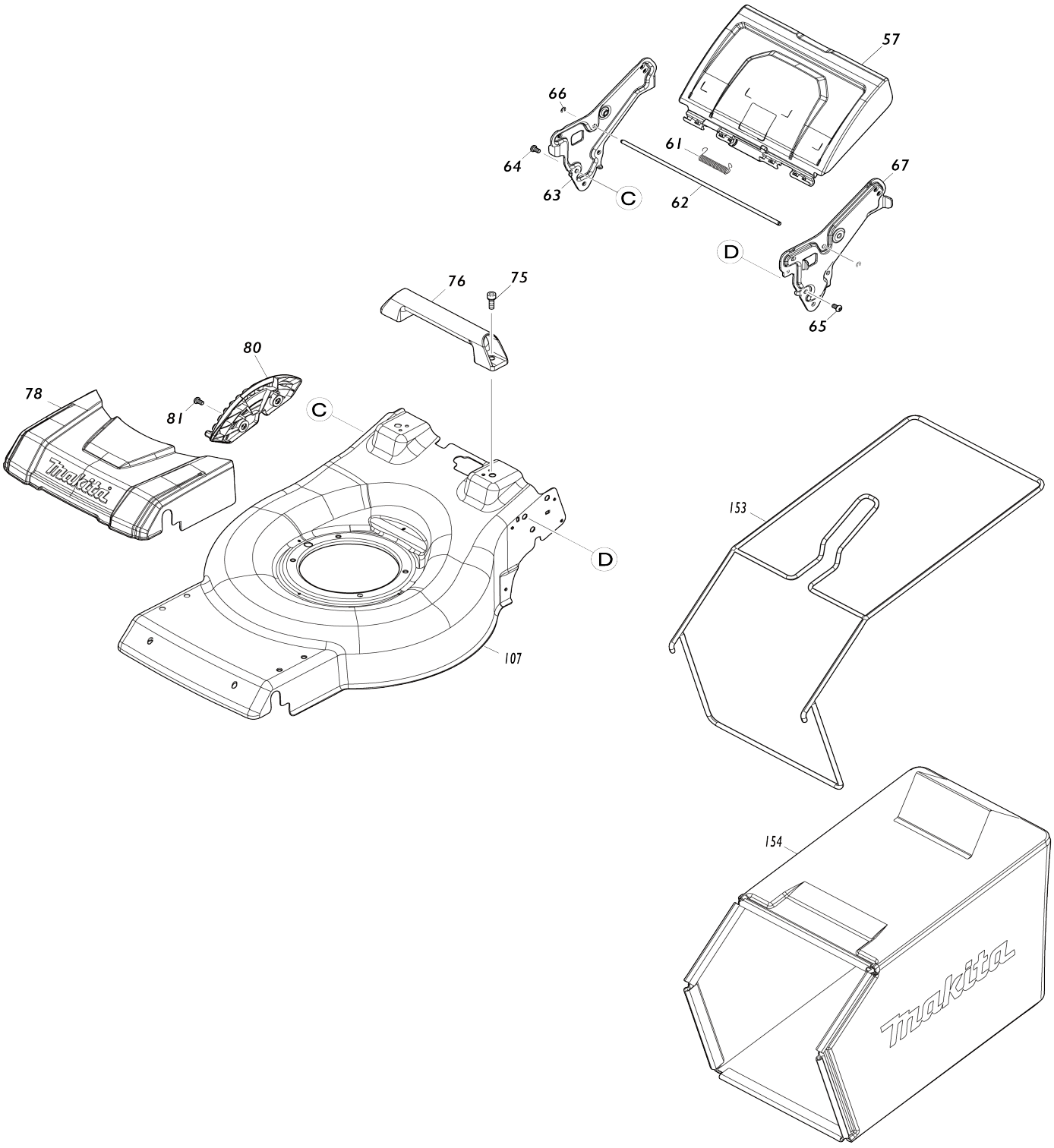

Model No.LM003J Cordless Lawn Mower

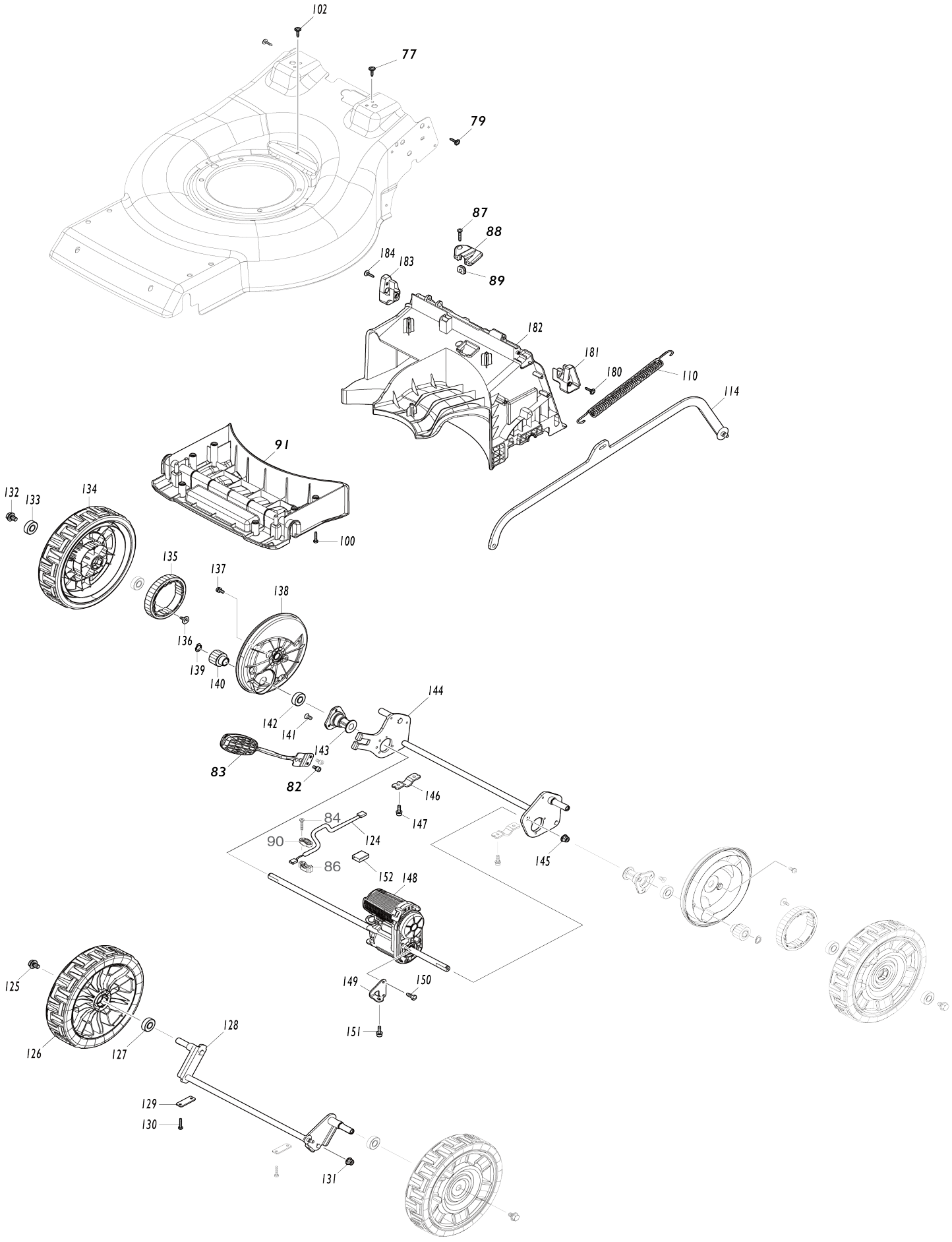

Model No.LM003J Cordless Lawn Mower

Item No.	Parts No.	Description	Interchangeability	Q'ty	New/ Old	Note1	Note2
001	327425-6	Driving lever		1			
002	911138-5	Pan head screw M4X20 WR		1			
003	459858-8	Driving lever support R		1			
C10	931102-0	Hex. nut M4		1			
004	253814-8	Flat washer 8		1			
005	265620-9	Flange tapping screw 4X18		1			
006	265620-9	Flange tapping screw 4X18		1			
007	253814-8	Flat washer 8		1			
008	413B10-4	Driving lever support L		1			
C10	931102-0	Hex. nut M4		1			
009	268225-4	Pin 5		1			
010	911138-5	Pan head screw M4X20 WR		1			
011	232566-4	Torsion spring 12		1			
012	327424-8	Switch lever		1			
013	266424-2	Binding head tapping screw 4X20		6			
014	183X93-7	Switch box set		1			
C10	8044A1-9	Indication label		1			
014		INC. 23					
015	231227-3	Compression spring 15		1			
016	459856-2	Switch lever support R		1			
C10	931102-0	Hex. nut M4		1			
017	459857-0	Lock off button		1			
018	911138-5	Pan head screw M4X20 WR		1			
019	632T11-3	Switch unit		1			
020	266424-2	Binding head tapping screw 4X20		2			
021	687123-7	Strain relief		1			
022	141E30-3	Switch circuit complete		1			
C10	8031N1-9	Switch label		1			
023	183X93-7	Switch box set		1			
C10	8044A1-9	Indication label		1			
023		INC. 14					
024	413A98-8	Driving lever holder		1			
025	413A98-8	Driving lever holder		1			
026	266424-2	Binding head tapping screw 4X20		5			
027	183U35-3	Lever box set		1			
027		INC. 38					
028	651083-9	Switch C3XA-1PSPM		1			
029	620J45-8	Dial circuit		1			
030	266424-2	Binding head tapping screw 4X20		2			
031	687123-7	Strain relief		1	*		
031-1	687124-5	Strain relief	O	1			
032	413A95-4	Lever box C		1			
033	213A12-2	O-ring 18		1			
034	413B01-5	Speed lever		1			
035	459863-5	Switch lever support L		1			

C10	931102-0	Hex. nut M4		1			
036	232575-3	Torsion spring 12		1			
037	911138-5	Pan head screw M4X20 WR		1			
038	183U35-3	Lever box set		1			
038		INC. 27					
039	266424-2	Binding head tapping screw 4X20		5			
040	699211-8	Power supply cord unit		1			
041	327871-3	Upper handle		1			
042	699212-6	Power supply cord unit		1			
043	265C08-1	Flat head bolt M8X50		2			
044	265C06-5	Thumb nut M8		2			
045	413L52-8	Clamp		2			
C10	931102-0	Hex. nut M4		2			
046	911168-6	Pan head screw M4X40 WR		2			
047	122D37-2	Handle lower assembly		1			
047		INC. 48-52					
048	258004-8	Spring pin 2.5-16		2			
049	413943-1	Knob		2			
050	327A66-4	Lock holder		2			
051	234121-8	Compression spring 8		2			
052	327A65-6	Lock pin		2			
053	265C07-3	Hex. socket head shoulder bolt M8		2			
054	136881-7	Battery cover assembly		1			
C10	8046H7-8	Indication label		1			
055	231037-8	Compression spring 7		1			
056	459852-0	Lock lever		1			
057	141M34-3	Rear flap complete		1			
C10	8044A0-1	Caution label		1			
058	961018-5	Stop ring (EXT) E-5		1			
059	327875-5	Rod 6		1			
061	232721-8	Torsion spring 8		1			
062	327A63-0	Rod 6		1			
063	347A56-1	Handle bracket R		1			
064	265B20-5	Hex. socket button head bolt M8X14		3			
065	265B20-5	Hex. socket button head bolt M8X14		3			
066	961018-5	Stop ring (EXT) E-5		2			
067	347A55-3	Handle bracket L		1			
073	8582E7-5	Serial No. label LM003J		1			
074	8582E4-1	Name plate LM003J		1			
075	922441-9	Hex. socket head bolt M8X25 W		2			
076	413L42-1	Rear grip		1			
077	265620-9	Flange tapping screw 4X18		2			
078	413L32-4	Front cover		1			
079	265620-9	Flange tapping screw 4X18		7			
080	413L44-7	Height adjust plate		1			
081	265B20-5	Hex. socket button head bolt M8X14		2			
082	922311-2	Hex. socket head bolt M6X12 W		2			
083	162B98-8	Height adjust lever complete		1			

084	266424-2	Binding head tapping screw 4X20		6			
085	687123-7	Strain relief		2			
086	687051-6	Strain relief		3			
087	266424-2	Binding head tapping screw 4X20		1			
088	413L50-2	Lead cover		1			
089	422526-6	Grommet		1			
090	687124-5	Strain relief		1			
091	413L34-0	Deck under cover F		1			
092	413L31-6	Inner plate		1			
093	620J95-3	LED circuit		1			
094	620J94-5	Controller		1			
095	141M33-5	Cowling cover complete		1			
096	266424-2	Binding head tapping screw 4X20		4			
097	122D39-8	Cowling upper assembly		1	*		
C10	422756-9	Sponge seal		1	*		
097-1	122D39-8	Cowling upper assembly	O	1			
C10	422756-9	Sponge seal		1			
098	413L25-1	Cowling lower		1			
099	911233-1	Pan head screw M5X20 WR		4			
100	266424-2	Binding head tapping screw 4X20		6			
101	922441-9	Hex. socket head bolt M8X25 W		4			
102	265620-9	Flange tapping screw 4X18		1			
103	266424-2	Binding head tapping screw 4X20		4			
104	266424-2	Binding head tapping screw 4X20		4			
105	266424-2	Binding head tapping screw 4X20		2			
107	141S43-8	Deck complete		1			
108	422956-1	Sponge		1			
110	232628-8	Tension spring 16		1			
114	347A57-9	Connecting rod		1			
115	122D36-4	Battery housing assembly		1			
115		INC. 116-121					
116	413942-3	Lock lever		1			
117	232716-1	Torsion spring 9		1			
118	413940-7	Spring holder		1			
119	232718-7	Compression spring 11		1			
120	413941-5	Spring support		1			
121	266424-2	Binding head tapping screw 4X20		2			
122	265B00-1	Flange tapping screw 4X12		2			
123	632U17-7	Terminal unit		1			
124	699214-2	Power supply cord unit		1			
125	265324-3	Hex. head flange bolt M8X12		2			
126	141M25-4	Tire 230 complete		2			
127	210163-6	Ball bearing 6001DDW		2			
128	162B99-6	Front shaft		1			
129	347869-4	Plate		2			
130	266424-2	Binding head tapping screw 4X2		4			

		0					
131	252301-4	Hex. flange lock nut M6-10		1			
132	265324-3	Hex. head flange bolt M8X12		2			
133	210163-6	Ball bearing 6001DDW		4			
134	141M26-2	Tire 230 complete		2			
135	227A02-9	Spur gear 47		2			
136	265B00-1	Flange tapping screw 4X12		4			
137	911213-7	Pan head screw M5X12 WR		4			
138	413L41-3	Wheel cap		2			
139	961052-5	Retaining ring (EXT) S-12		2			
140	227A01-1	Spur gear 15		2			
141	251951-2	Hex. socket countersunk head sc rew M5X10		6			
142	210163-6	Ball bearing 6001DDW		2			
143	313390-5	Rear shaft holder		2			
144	162C01-5	Rear shaft		1			
145	252301-4	Hex. flange lock nut M6-10		1			
146	347865-2	Clamp 19		2			
147	922223-9	Hex. socket head bolt M5X16 WR		4			
148	122D27-5	Drive unit		1			
149	347A59-5	Bracket		1			
150	266388-0	Binding head tapping screw 5X1 6		2			
151	922223-9	Hex. socket head bolt M5X16 WR		1			
152	683A20-1	Tube complete		1			
153	162C44-7	Grass catcher bracket		1			
154	162C11-2	Grass catcher		1			
158	911163-6	Pan head screw M4X35 WR		1			
159	413944-9	Clamp		1			
C10	931102-0	Hex. nut M4		1			
160	141M30-1	Stator base complete		1			
161	253455-0	Wave washer 19		1			
162	620J44-0	Controller B		1			
163	265C89-5	Flat head screw M3X10		3	*		
163-1	265F08-9	FLAT HEAD SCREW M3X10	O	3			
164	629B85-5	Stator		1			
165	911158-9	Pan head screw M4X30 WR		6			
166	210059-1	Ball bearing 6000DDW		1			
167	519786-0	Rotor assembly		1			
167		INC. 166,168					
168	211332-2	Ball bearing 6004LLU		1			
169	422955-3	Grommet		2			
171	312D43-7	Bracket		1			
172	911233-1	Pan head screw M5X20 WR		4			
173	413L53-6	Baffle plate		1			
174	911126-2	Pan head screw M4X16 W		4			
175	240205-2	Fan 170		1			
176	312D47-9	Blade support 480		1			
177	266424-2	Binding head tapping screw 4X2 0		2			
178	191V97-3	Blade 480 set		1			
179	265A69-9	Hex. head bolt M10X35 WG		1	*		

179-1	265D72-8	Hex. head bolt M10X35 WG	<	1			
180	265620-9	Flange tapping screw 4X18		1			
181	183X16-5	Grass guard set		1			
181		INC. 183					
182	413L36-6	Deck under cover R		1			
C10	252329-2	Square nut M5		5			
183	183X16-5	Grass guard set		1			
183		INC. 181					
184	265620-9	Flange tapping screw 4X18		1			
A01	327589-6	Rod 6		1			
A02	413L54-4	Mulching plug 480		1			
A03	413L56-0	Discharge chute		1			
A04	782210-8	Box wrench		1			
A05B	413A28-9	Battery cover		1			
A06B	***DC64WA	DC64WA BATTRY CHARGER		1			
A06B		COMPO-PARTS					
A07B	191Y69-6	Battery BL64100 set		1			
E01	688140-0	Line filter		1			
E03	800A17-7	Sound 94dB label		1			