Model No.KP312S Planer

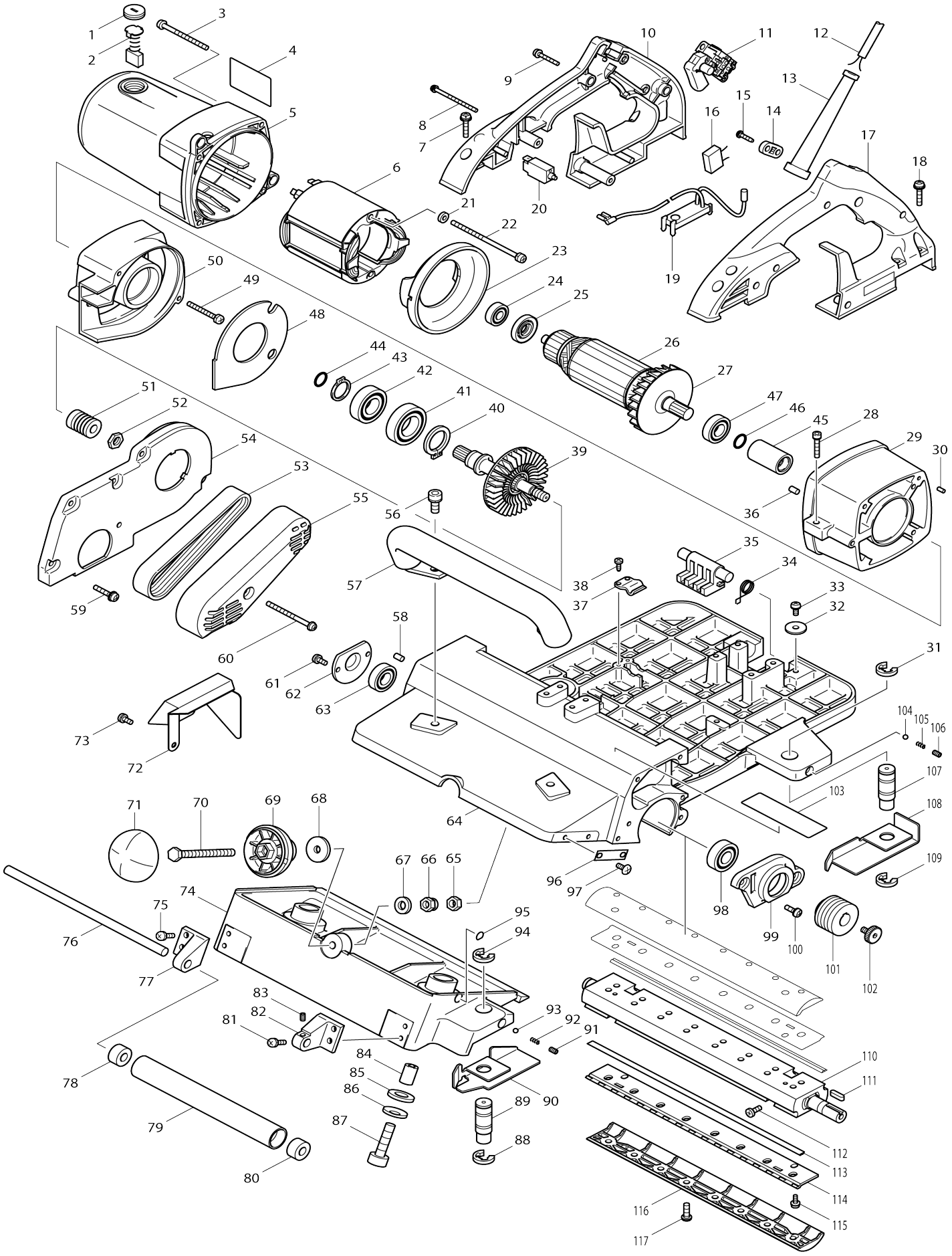

Model No.KP312S Planer

Item No.	Parts No.	Description	Interchangeability	Q'ty	New/ Old	Note1	Note2
001	643700-5	Holder cap 7-18		2	*		
001-1	644802-0	Holder cap	O	2			
002	191953-5	Carbon brush set CB-203		1	*		
002-1	194991-6	Carbon brush set CB203	O	1			
003	911288-6	Pan head screw M5X65 WR		4			
004	850360-8	Name plate KP312S		1			
005	153593-7	Motor housing complete		1			
006	636244-2	Field		1			
007	911248-8	Pan head screw M5X28 WR		4			
008	911188-0	Pan head screw M4X60 WR		2			
009	911153-9	Pan head screw M4X28 WR		2			
010	183585-2	Handle set		1			
010		INC. 17					
011	651057-0	Switch TG71CL-2		1			
012	695140-3	Power supply cord 1.5-2-10.0		1			
013	682564-2	Cord guard		1			
014	687053-2	Strain relief		1			
015	265995-6	Binding head tapping screw 4X18		2			
016	645200-1	Noise suppressor		1			
017	183585-2	Handle set		1			
017		INC. 10					
018	911248-8	Pan head screw M5X28 WR		4			
019	631529-1	Soft start circuit		1			
020	652766-4	Overcurrent relay 1140-E211-P1 M1		1			
021	941102-2	Flat washer 5		2			
022	911942-2	Pan head screw M5X95 WM		2			
023	418156-9	Baffle plate		1			
024	211061-7	Ball bearing 6000LLB		1			
025	681640-9	Insulation washer		1			
026	516878-6	Armature assembly 220-240V		1			
026		INC. 24,25,27,47					
027	241868-7	Fan 82		1			
028	922251-4	Hex. socket head bolt M5X30 W		2			
029	317674-3	Motor bracket		1			
030	256251-5	Pin 4		1			
031	961062-2	Stop ring (EXT) E-12		1			
032	253010-8	Flat washer 6		2			
033	911211-1	Pan head screw M5X12 W		2			
034	231668-3	Torsion spring 15		1			
035	418155-1	Foot		1			
036	263005-3	Rubber pin 6		1			
037	232068-0	Leaf spring		1			
038	266026-4	Binding head tapping screw 4X12		2			
039	153578-3	Spindle complete		1			
040	961105-0	Retaining ring (EXT) S-25		1			

041	211351-8	Ball bearing 6005LLB		1			
042	211301-3	Ball bearing 6004LLB		1			
043	961060-6	Retaining ring (EXT) S-20		1			
044	213154-6	O-ring 14		1			
045	331650-3	Coupling		1			
046	213154-6	O-ring 14		1			
047	211236-8	Ball bearing 6002DDW		1			
048	345320-8	Blast disc		1			
049	911268-2	Pan head screw M5X45 WR		3			
050	317673-5	Main bracket		1			
051	222140-6	V-pulley 9-23L		1			
052	252085-4	Hex. nut M10-17		1			
053	225061-1	Poly V-belt 9-355		1			
054	317676-9	Bracket cover		1			
055	317672-7	Belt cover		1			
056	922431-2	Hex. socket head bolt M8X20 W		2			
057	273522-5	Front grip		1			
058	263005-3	Rubber pin 6		1			
059	911248-8	Pan head screw M5X28 WR		5			
060	911288-6	Pan head screw M5X65 WR		1			
061	911211-1	Pan head screw M5X12 W		2			
062	285023-1	Bearing cover		1			
063	211236-8	Ball bearing 6002DDW		1			
064	183570-5	Main base set		1			
064		INC. 103					
065	931403-6	Hex. nut M8		1			
066	252105-4	Hex. lock nut M8-13		1			
067	941201-0	Flat washer 8		1			
068	253877-4	Flat washer 8		1			
069	418177-1	Knob		1			
070	265511-4	Hex. head bolt M8X90		1			
071	417249-9	Knob cover		1			
072	345338-9	Chip guide		1			
073	911211-1	Pan head screw M5X12 W		2			
074	317675-1	Front base		1			
075	251259-4	Pan head screw M5X16		2			
076	256853-7	Rod 10		1			
077	317668-8	Roller holder R		1			
078	214054-3	Plane bearing 10		1			
079	331368-6	Roller 26-203		1			
080	214054-3	Plane bearing 10		1			
081	251259-4	Pan head screw M5X16		2			
082	317667-0	Roller holder L		1			
083	266229-0	Hex. socket set screw (cup point) M5X8		1			
084	257589-1	Sleeve 10		2			
085	267198-8	Flat washer 14		2			
086	232076-1	Coned disc spring		2			
087	922562-7	Hex. socket head bolt M10X40		2			
088	961062-2	Stop ring (EXT) E-12		1			
089	324334-0	Guide rule shaft		1			
090	345322-4	Guide plate F		1			

091	266229-0	Hex. socket set screw (cup point) M5X8		1			
092	231386-3	Compression spring 3		1			
093	216008-6	Steel ball 4		1			
094	961062-2	Stop ring (EXT) E-12		1			
095	812074-7	Indication label		1			
096	816393-3	Scale plate		1			
097	251381-7	Truss head screw M5X12		2			
098	211206-7	Ball bearing 6202LLB		1			
099	317671-9	Bearing box		1			
100	251259-4	Pan head screw M5X16		2			
101	222162-6	V-pulley 9-39.7		1			
102	265854-4	Hex. socket head bolt M6X12		1			
103	819084-5	Makita logo label		1			
104	216008-6	Steel ball 4		1			
105	231386-3	Compression spring 3		1			
106	266229-0	Hex. socket set screw (cup point) M5X8		1			
107	324334-0	Guide rule shaft		1			
108	345321-6	Guide plate R		1			
109	961062-2	Stop ring (EXT) E-12		1			
110	161139-5	Drum		1			
111	254221-8	Key 4		1			
112	251212-0	Flat head screw M5X13		4			
113	B-02870	HSS PLANER BLADE 312MM		1			
114	345328-2	Set plate 310		2			
115	911113-1	Pan head screw M4X10 WR		4			
116	317669-6	Drum plate		2	*		
116-1	183621-4	Drum plate set	<	1			
117	265484-1	Hex. socket button head bolt M6 X17		16			
A01	193733-5	Nozzle set		1			
C10	911248-8	Pan head screw M5X28 WR		2			
A02	762001-3	Triangular rule		1			
A03	410300-4	Joint 70		1			
A04	783219-3	Hex. wrench 4		1			
F01	410300-4	Joint 70		1			
F02	193733-5	Nozzle set		1			
F03	181575-9	Joint 70		1			