Model No.JR3070CT RECIPRO SAW

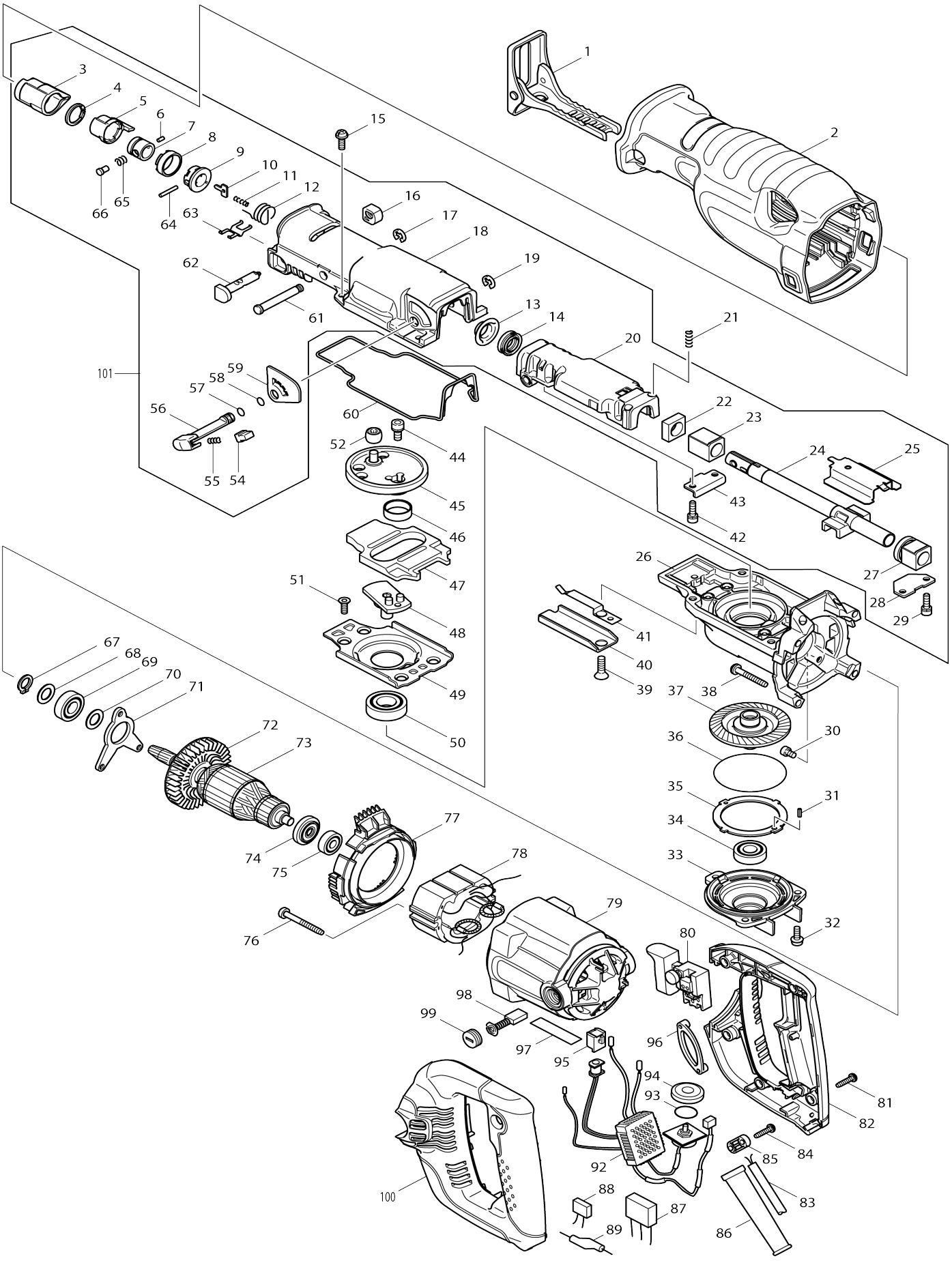

Model No.JR3070CT RECIPRO SAW

Item No.	Parts No.	Description	Interchangeability	Q'ty	New/ Old	Note1	Note2
001	165406-0	Shoe		1	*		
001-1	163451-9	Shoe	O	1			
002	421904-7	Insulation cover		1			
003	421894-4	Protector		1	*		
003-1	424147-0	Protector	S	1			
004	961078-7	Retaining ring (EXT) round S-18		1	*		
004-1	257952-8	Spiro lock washer 18	S	1	*		
004-2	257430-8	Retaining ring (EXT) 18	S	1			
005	310160-3	Driving sleeve		1	*		
005-1	310160-3	Driving sleeve	O	1	*		
005-2	310285-3	Driving sleeve	S	1			
006	268094-3	Pin 3		1			
007	331639-1	Guide sleeve		1	*		
007-1	331720-8	Guide sleeve	S	1	*		
007-2	327043-0	Guide sleeve	S	1			
008	417791-0	Driving sleeve guide		1			
009	418311-3	Sleeve		1			
010	345214-7	Push plate		1			
011	233025-1	Compression spring 2		1			
012	231687-9	Torsion spring 17		1			
013	257742-9	Shoulder sleeve 14		1			
014	213174-0	X-ring 14		1			
015	911225-0	Pan head screw M5X16 WM		4			
016	418806-6	Cap		1			
017	961012-7	Stop ring (EXT) E-6		1			
018	154551-6	Gear housing cover complete		1			
019	961012-7	Stop ring (EXT) E-6		1			
020	154502-9	Slider support complete		1			
021	233038-2	Compression spring 5		2			
022	423343-7	Seal plate 14		1			
023	214170-1	Plane bearing 14A		1			
024	168410-8	Slider		1	*		
024-1	154804-3	Slider complete	O	1	*		
024-2	168410-8	Slider	O	1	*		
024-3	168410-8	Slider	O	1			
025	345487-2	Slide plate		1			
026	317842-8	Gear housing		1			
027	154547-7	Bearing complete		1	*		
027-1	154547-7	Bearing complete	O	1			
028	345486-4	Plate B		1			
029	266086-6	Hex. socket head bolt M5X16		2	*		
029-1	911225-0	Pan head screw M5X16 WM	O	2			
030	265530-0	Hex. socket head bolt M5X8		3			
031	951051-5	Spring pin 3-8		1	*		
032	911225-0	Pan head screw M5X16 WM		3			
033	317844-4	Bearing box		1			
034	211101-1	Ball bearing 6001LLB		1	*		

034-1	210340-0	BALL BEARING 6001LLB	O	1			
035	345488-0	Gear plate		1	*		
036	213726-7	O-ring 62		1			
037	154549-3	Torque limiter complete		1			
038	266012-5	Binding head tapping screw 5X35		4	*		
038-1	266373-3	Binding head tapping screw 5X35	O	4			
039	265149-5	Countersunk head screw M6X16		1	*		
039-1	265165-7	Hexalobular socket countersunk head screw M6X16	O	1			
040	345479-1	Shoe guide		1			
041	232222-6	Leaf spring B		1			
042	266086-6	Hex. socket head bolt M5X16		2	*		
042-1	911225-0	Pan head screw M5X16 WM	O	2			
043	345485-6	Plate A		1			
044	265531-8	Hex. socket head bolt M6X14		1			
045	154545-1	Crank cam complete		1	*		
045-1	154545-1	Crank cam complete	O	1			
046	257265-7	Ring 21		1			
047	313121-2	Counter weight		1			
048	154546-9	Crank base complete		1			
049	345489-8	Guide plate		1			
050	211251-2	Ball bearing 6003LLB		1	*		
050-1	210339-5	BALL BEARING 6003LLB	O	1			
051	265148-7	Hexalobular socket countersunk head screw M5X14		4			
052	212957-5	Needle bearing 710		1			
054	418991-5	Stopper		1			
055	231309-1	Compression spring 5		1			
056	272247-8	Lever 20		1			
057	213021-5	O-ring 5		1			
058	213021-5	O-ring 5		1			
059	413095-8	Plate C		1			
060	421899-4	Seal ring		1			
061	268012-1	Flat fillister HD. pin 7		1			
062	162236-0	Shift button		1			
063	232221-8	Leaf spring A		1			
064	256158-5	Pin 3		1			
065	233345-3	Compression spring 6		1			
066	256492-3	Shoulder pin 5		1			
067	961052-5	Retaining ring (EXT) S-12		1			
068	253744-3	Flat washer 12		1			
069	211131-2	Ball bearing 6001DDW		1	*		
069-1	210163-6	Ball bearing 6001DDW	O	1			
070	253744-3	Flat washer 12		1			
071	285719-4	Bearing retainer A		1			
072	241863-7	Fan 70		1			
073	513603-6	Armature assembly 220-240V		1			
073		INC. 72,74,75					
074	681650-6	Insulation washer		1			
075	210029-0	Ball bearing 608ZZ		1			
076	266056-5	Binding head tapping screw 5X4		2	*		

		5					
076-1	266466-6	Binding head tapping screw 5X45	O	2	*		
076-2	266056-5	Binding head tapping screw 5X45	O	2	*		
076-3	266466-6	Binding head tapping screw 5X45	O	2			
077	418817-1	Baffle plate		1			
078	525718-7	Field assembly 220-240V		1			
C10	654020-2	Ring terminal 36L		2			
C20	654501-6	Non-insulated splice P-1.25		2	*		
C21	654485-8	Non-insulated splice	O	2	*		
079	154498-4	Motor housing complete		1			
C10	643708-9	Brush holder 5-11		2			
080	650219-7	Switch TG71ARS-1		1	*		
080-1	650222-8	Switch TG71ARS-1	<	1	*		
080-2	650255-3	Switch TG71AS-1	X	1			
081	265995-6	Binding head tapping screw 4X18		5			
082	183933-5	Handle set		1	*		
082		INC. 100			*		
082-1	183A45-0	Handle set	X	1			
082-1		INC. 100					
083	665890-4	Power supply cord 1.0-2-4.0		1			
084	265995-6	Binding head tapping screw 4X18		2			
085	687052-4	Strain relief		1	*		
085-1	687124-5	Strain relief	O	1			
086	682573-1	Cord guard 10		1			
087	645253-0	Noise suppressor		1			
088	645006-7	Noise suppressor		1	*		
088-1	645006-7	Noise suppressor	O	1			
089	646049-2	Choke coil		1			
092	631651-4	Controller		1			
093	213261-5	O-ring 17		1			
094	418905-4	Dial		1			
095	418518-1	Sleeve		1			
096	421448-7	Rubber band		1			
097	861231-4	Name plate JR3070CT		1			
098	191963-2	Carbon brush set CB-303		1	*		
098-1	194996-6	Carbon brush set CB-303	O	1			
099	643750-0	Holder cap 7-11		2			
100	183933-5	Handle set		1	*		
100		INC. 82			*		
100-1	183A45-0	Handle set	X	1			
100-1		INC. 82					
101	125524-6	Gear housing cover assembly		1	*		
101		INC. 3-14,16-20,22-25,27-29,			*		
101		INC. 42,43,54-59,61-66			*		
101-1	127400-0	Gear housing cover assembly	<	1			
101-1		INC. 3-14,16-20,22-25,27-29,					
101-1		INC. 42,43,54-59,61-66					
A01	824734-9	Plastic case		1	*		

C10	417724-5	Latch		2	*		
A01-1	824734-9	Plastic case	O	1	*		
C10	417724-5	Latch		2	*		
C20	819143-5	Makita logo label		1	*		
A01-2	821621-3	Plastic case	O	1			
C10	162315-4	Latch		2			
A02	792003-5	Blade set 21,22,23,X1		1	*		
A02-1	B-05038	RECIPRO SAW BLADE FOR METAL	<	1			
A03	B-05044	RECIPRO SAW BLADE FOR PLYWOOD		1			
A04	B-05153	RECIPRO SAW BLADE FOR WOOD		1			

Please state Parts No. when your order.

Print Date 12/29/2025