Model No.HS7611 Circular Saw

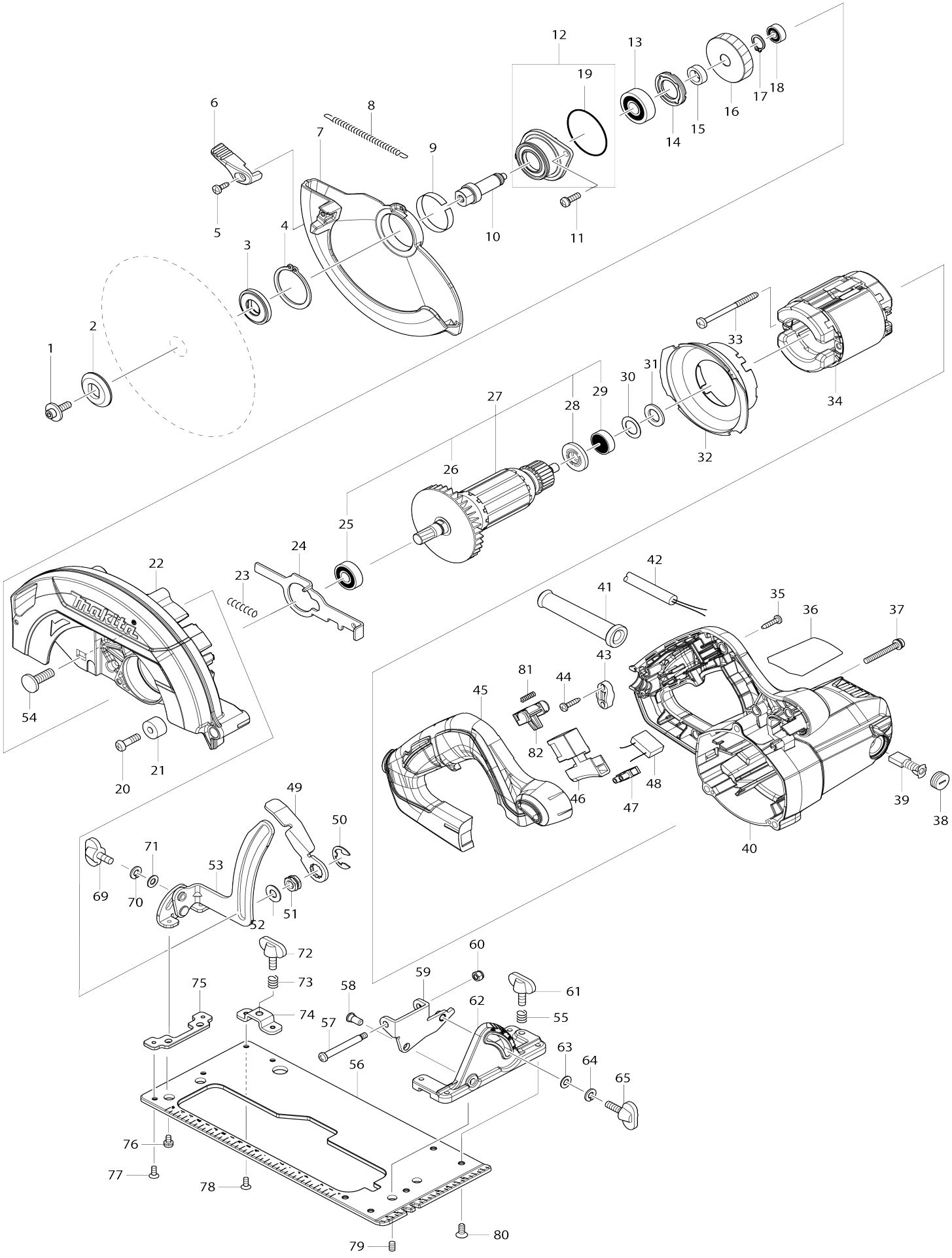

Model No.HS7611 Circular Saw

Item No.	Parts No.	Description	Interchangeability	Q'ty	New/ Old	Note1	Note2
001	266024-8	Hex. socket head bolt M6X20		1			
002	224409-4	Outer flange 35		1			
003	224593-5	Inner flange 35		1			
004	961155-5	Retaining ring (EXT) S-38		1			
005	266034-5	Binding head tapping screw 4X16		1			
006	271444-3	Lever 37		1			
007	319188-8	Safety cover		1	*		
007-1	312E14-0	Safety cover	O	1			
008	231887-1	Tension spring 4		1			
009	345391-5	Thickness ring		1			
010	326444-9	Spindle		1			
011	911226-8	Pan head screw M5X18 W		2			
012	135947-0	Bearing box assembly		1			
012		INC. 19					
013	211129-9	Ball bearing 6201DDW		1	*		
013-1	210195-3	Ball bearing 6201DDW	O	1			
014	285852-2	Bearing retainer 19-33		1			
015	257173-2	Ring 12		1			
016	221575-8	Helical gear 43		1			
017	961052-5	Retaining ring (EXT) S-12		1			
018	210028-2	Ball bearing 606ZZ		1			
019	213560-5	O-ring 44		1			
020	265117-8	Pan head screw M6X20		1			
021	262556-3	Rubber sleeve 6		1			
022	144729-9	Blade case complete		1			
C10	213415-4	O-ring 28		1			
023	233117-6	Compression spring 6		1			
024	347284-2	Shaft lock		1			
025	211131-2	Ball bearing 6001DDW		1	*		
025-1	210216-1	Ball bearing 6001DDW	>	1			
026	241876-8	Fan 76		1			
027	515433-1	Armature assembly 220V		1	*		
027		INC. 25,26,28,29			*		
027-1	510586-1	Armature assembly 220V	>	1			
027-1		INC. 25,26,28,29					
028	681644-1	Insulation washer		1			
029	210005-4	Ball bearing 608DDW		1			
030	253192-6	Flat washer 14		1			
031	261109-5	Rubber washer 13		1			
032	458033-3	Baffle plate		1			
033	266352-1	Binding head tapping screw 5X65		2			
034	594679-2	Field assembly 220-240V		1			
C10	654020-2	Ring terminal 36L		2			
C20	654501-6	Non-insulated splice P-1.25		2	*		
C21	654485-8	Non-insulated splice	O	2	*		
C22	654501-6	Non-insulated splice P-1.25	O	2			

C30	689055-4	Ring terminal retainer 15.5		2			
035	266326-2	Binding head tapping screw 4X18		5	*		
035-1	265652-6	Binding head tapping screw 4X18	O	5			
036	854B74-3	Name plate HS7611		1			
037	265104-7	Pan head screw M5X40		3			
038	643750-0	Holder cap 7-11		2			
039	191963-2	Carbon brush set CB-303		1	*		
039-1	194996-6	Carbon brush set CB-303	O	1			
040	144767-1	Motor housing complete		1			
C10	643708-9	Brush holder 5-11		2			
041	682540-6	Cord guard 9.3-90		1	*		
041-1	682574-9	Cord guard 10	O	1			
042	665865-3	Power supply cord 1.0-2-2.5		1			
043	687124-5	Strain relief		1			
044	266326-2	Binding head tapping screw 4X18		2	*		
044-1	265652-6	Binding head tapping screw 4X18	O	2			
045	458087-0	Handle cover		1			
046	650245-6	Switch SGE115CDY-10		1			
047	654532-5	Terminal block 1P		1			
048	645200-1	Noise suppressor		1			
049	346311-2	Lever plate		1			
050	257953-6	Bow stop ring (EXT) E-12		1			
051	252199-9	Hex. nut M8-13		1			
052	941201-0	Flat washer 8		1			
053	161776-5	Depth guide complete		1			
054	266396-1	Flat head square neck bolt M8X24		1			
055	233376-2	Compression spring 8		1			
056	346826-9	Base		1			
057	265118-6	Pan head shoulder screw M5		1			
058	256480-0	Shoulder pin 6-7		1			
059	346827-7	Angular guide		1			
060	252103-8	Hex. lock nut M5-8		1			
061	265701-9	Thumb screw M6X14		1			
062	317031-5	Angular plate		1			
063	941151-9	Flat washer 6		1			
064	942151-2	Spring washer 6		1	*		
064-1	253428-3	Spring washer 6	O	1	*		
065	265708-5	Thumb screw M6X20		1			
069	265701-9	Thumb screw M6X14		1			
070	942151-2	Spring washer 6		1	*		
070-1	253428-3	Spring washer 6	O	1	*		
071	941151-9	Flat washer 6		1			
072	265701-9	Thumb screw M6X14		1			
073	233376-2	Compression spring 8		1			
074	346847-1	Bracket		1			
075	346846-3	Plate		1			
076	911106-8	Pan head screw M4X8 W		2			
077	265085-5	Countersunk head screw M4X8		2			

078	265085-5	Countersunk head screw M4X8		2			
079	266436-5	Hex. socket set screw (flat point) M5X8		2			
080	912212-2	Countersunk head screw M5X12		5			
081	231469-9	Compression spring 4		1			
082	453284-3	Lock off button		1			
A01	783217-7	Hex. wrench 5		1			
A02	B-07967	T.C.T.SAW BLADE 190X30X12T		1			
A03	164095-8	Guide rule		1			
A04	196520-1	Dust nozzle set		1			
B01	198933-2	Dust nozzle set		1			
B01		INC. 6,A04					
F01	194367-7	Guide rail 3000 set		1			
F02	194368-5	Guide rail 1400 set		1			
F03	194385-5	Clamp set		1			
F04	194416-0	Sheet 10000 set		1			
F05	194417-8	Rubber sheet 10000 set		1			
F06	194418-6	Position sheet 1400 set		1			
F08	194910-2	Position sheet 1900 set		1			
F10	194925-9	Guide rail 1900 set		1			
F13	196664-7	Bevel guide set		1	*		
F14	196994-6	Rule bar C set		1			
F15	197005-0	Guide rail adapter C set		1			
F16	198933-2	Dust nozzle set		1			
F17	199140-0	Guide rail 1000 set		1			
F18	199141-8	Guide rail 1500 set		1			
F19	199826-6	Ratchet clamp set		1			
F20	191B18-5	Guide rail adapter C set		1	*		
F21	1918P3-6	GUIDE RULE SET		1			
G49	1913K5-7	Push clamp set		1			