Model No.HR4013C Rotary Hammer

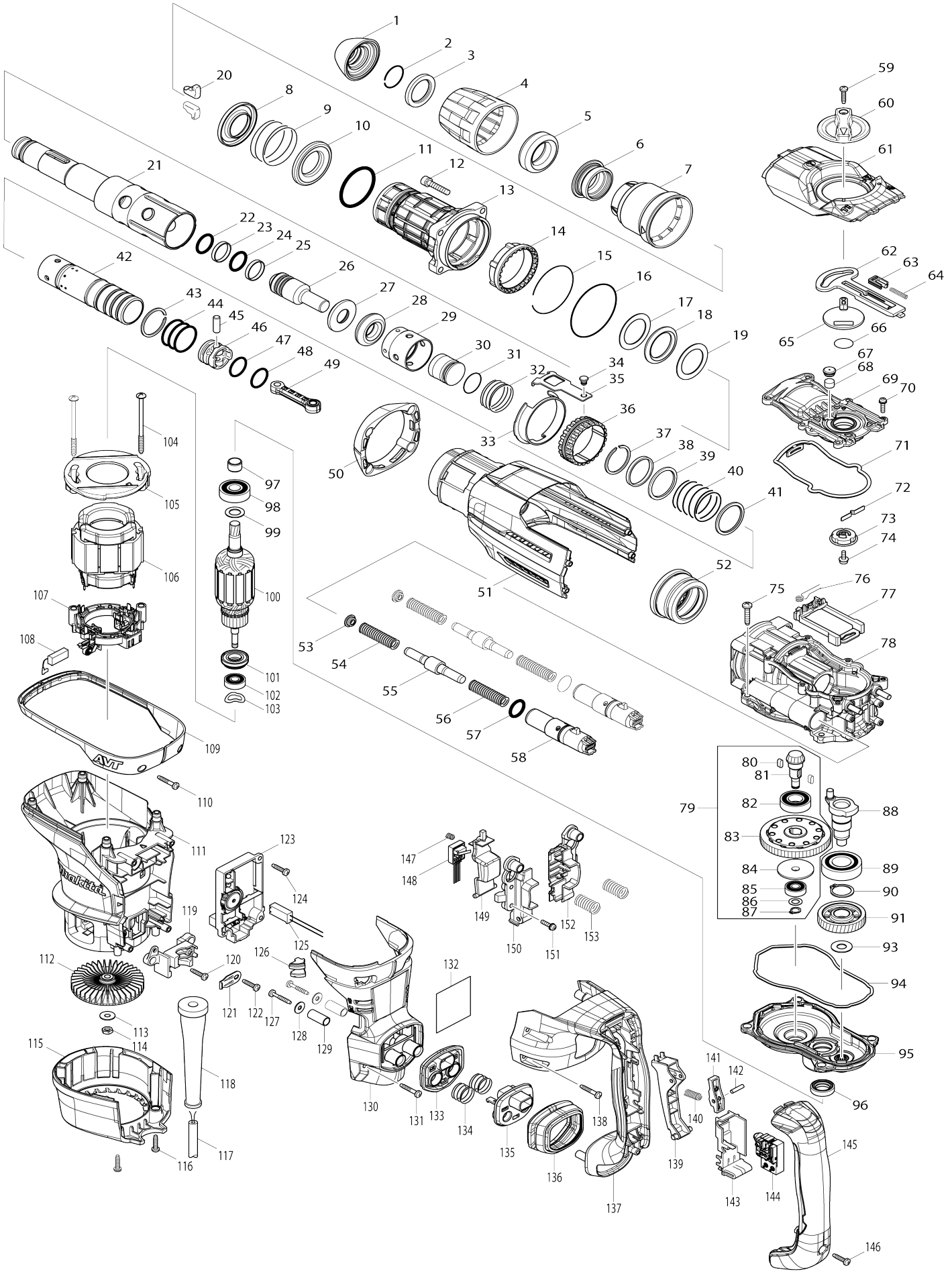

Model No.HR4013C Rotary Hammer

Item No.	Parts No.	Description	Interchangeability	Q'ty	New/ Old	Note1	Note2
001	286292-7	Tool holder cap		1			
002	233948-3	Ring spring 25		1			
003	257308-5	Ring 28		1			
004	454330-5	Chuck cover		1			
005	262167-4	Rubber ring 30		1			
006	326272-2	Chuck ring		1			
007	454331-3	Release cover		1			
008	346670-4	Spring guide		1			
009	234288-2	Compression spring 46		1			
010	346670-4	Spring guide		1			
011	213615-6	O-ring 46		1			
012	922351-0	Hex. socket head bolt M6X30 W		4			
013	141956-9	Barrel complete		1			
C10	213246-1	O-ring 38		1			
C20	213490-0	Oil seal 32		1			
C30	213492-6	O-ring 32		1			
014	454337-1	Lock sleeve		1			
015	234290-5	Ring spring 59		1			
016	213707-1	O-ring 65		1			
017	267469-3	Flat washer 32		1			
018	262168-2	Rubber ring 32		1			
019	267469-3	Flat washer 32		1			
020	310257-8	Tool retainer		2			
021	326268-3	Tool holder		1			
022	213317-4	O-ring 20		1			
023	213392-0	Fluoro carbon resin ring 25		1			
024	213317-4	O-ring 20		1			
025	213392-0	Fluoro carbon resin ring 25		1			
026	326269-1	Impact bolt		1			
027	326274-8	Ring 17		1			
028	262166-6	Rubber ring 18		1			
029	454347-8	Slide sleeve		1			
030	326270-6	Striker		1			
031	213695-2	O-ring 22		1			
032	234289-0	Compression spring 33		1			
033	346673-8	Guide ring		1			
034	256548-2	Flat fillister HD. pin 6		1			
035	346671-2	Link plate		1			
036	313255-1	Driving sleeve		1			
037	257991-8	Retaining ring (EXT) WR-32.5		1			
038	257340-9	Ring 33		1			
039	267470-8	Flat washer 33		1			
040	234287-4	Compression spring 34		1			
041	267470-8	Flat washer 33		1			
042	332063-1	Cylinder 28.5		1			
043	257991-8	Retaining ring (EXT) WR-32.5		1			
044	213406-5	O-ring 30		3			

045	256197-5	Pin 7		1			
046	419004-5	Piston		1			
047	213379-2	O-ring 21		1	*		
047-1	213695-2	O-ring 22	X	1			
048	213695-2	O-ring 22		1	*		
048-1	213379-2	O-ring 21	X	1			
049	454317-7	Connecting rod		1			
050	424560-2	Housing cap		1			
051	141957-7	Housing cover A complete		1			
052	227613-4	Spiral bevel gear 26		1			
053	454342-8	Spring plate		2			
054	234286-6	Compression spring 11		2			
055	326273-0	Counter weight		2			
056	234286-6	Compression spring 11		2			
057	213325-5	O-ring 19		2			
058	142289-5	Holder complete		2			
059	265995-6	Binding head tapping screw 4X18		1			
060	454326-6	Change lever		1			
061	318988-3	Crank cap cover		1			
062	454339-7	Control plate		1			
063	454340-2	Slide plate		1			
064	234284-0	Compression spring 4		1			
065	454345-2	Crank lever		1			
066	213262-3	O-ring 18		1			
067	424556-3	Filter cap		1			
068	443182-9	Filter		1			
069	454319-3	Crank cap		1			
070	911128-8	Pan head screw M4X16 WR		6			
071	424559-7	Seal ring B		1			
072	232280-2	Leaf spring		1			
073	454318-5	Link lever		1			
074	911511-9	Pan head screw M4X10 WRM		1			
075	266041-8	Binding head tapping screw 5X25		4			
076	233603-7	Torsion spring 7		1			
077	454338-9	Link guide		1			
078	141953-5	Crank housing A complete		1			
079	126290-8	Torque limiter assembly		1			
079		INC. 80-87					
080	254239-9	Key 4		2			
081	227612-6	Spiral bevel gear 7		1			
082	211232-6	Ball bearing 6002LLU		1			
083	141959-3	Torque limiter complete		1			
084	324727-1	Shoulder washer 8		1			
085	210005-4	Ball bearing 608DDW		1			
086	253215-0	Flat washer 8		1			
087	961004-6	Retaining ring (EXT) S-8		1			
088	326271-4	Crankshaft		1			
089	211332-2	Ball bearing 6004LLU		1			
090	961060-6	Retaining ring (EXT) S-20		1			
091	227772-4	Helical gear 37		1			

093	253180-3	Flat washer 10		1			
094	424558-9	Seal ring A		1			
095	141955-1	Gear housing complete		1			
096	213231-4	Oil seal 15		1			
097	331596-3	Sleeve 12		1			
098	211137-0	Ball bearing 6201LLU		1			
099	253744-3	Flat washer 12		1			
100	513888-4	Armature assembly 220-240V		1	*		
100		INC. 97,98,99,101,102			*		
100-1	518395-2	ARMATURE ASS'Y 220-240V	<	1			
100-1		INC. 97,98,99,101,102					
101	681650-6	Insulation washer		1			
102	210005-4	Ball bearing 608DDW		1			
103	267721-9	Wave washer 15		1			
104	266568-8	Binding head tapping screw 5X80		2			
105	454329-0	Baffle plate		1			
106	625758-6	Field 220-240V		1			
107	632A84-2	Brush holder unit		1	*		
107-1	632E31-7	Brush holder unit	S	1			
108	194160-9	Carbon brush set CB-350		1	*		
108-1	197245-0	Carbon brush set CB-351	S	1	*		
108-2	197244-2	Carbon brush set CB-351	O	1			
109	454348-6	Guard 40		1			
110	265999-8	Binding head tapping screw 4X25		2			
111	454316-9	Motor housing		1			
112	240146-2	Fan 76		1			
113	253047-5	Flat washer 6		1			
114	931303-0	Hex. nut M6		1			
115	454328-2	Rear cover		1			
116	265995-6	Binding head tapping screw 4X18		2			
117	695123-3	Power supply cord 1.5-2-4.0		1			
118	682560-0	Cord guard 10		1			
119	419024-9	Strain relief base		1			
120	265995-6	Binding head tapping screw 4X18		1			
121	687169-3	Strain relief		1			
122	265995-6	Binding head tapping screw 4X18		1			
123	620200-2	Controller		1			
124	265995-6	Binding head tapping screw 4X18		1			
125	632B52-1	Lead unit		1			
126	454346-0	Lens		1			
127	265999-8	Binding head tapping screw 4X25		2			
128	253194-2	Flat washer 5		2			
129	257813-2	Sleeve 9		2			
130	454320-8	Handle base		1			
131	266041-8	Binding head tapping screw 5X25		2			
132	814T16-7	Name plate HR4013C		1			

133	454343-6	Dust support A		1			
134	234283-2	Compression spring 18.5		2			
135	454344-4	Dust support B		1			
136	424557-1	Dust cover		1			
137	454321-6	Handle A		1			
138	265999-8	Binding head tapping screw 4X25		4			
139	454332-1	Switch lever A		1			
140	234285-8	Compression spring 7		1			
141	454327-4	Sub lever		1			
142	268309-8	Pin 4		1			
143	154626-1	Switch holder complete		1			
144	650678-5	Switch C3PA-1121		1			
145	454323-2	Handle cover		1			
146	265995-6	Binding head tapping screw 4X18		1			
147	234281-6	Compression spring 6		1			
148	632A83-4	Switch unit		1			
149	454336-3	Switch lever C		1			
150	187692-3	Switch case set		1			
150		INC. 152					
151	911128-8	Pan head screw M4X16 WR		4			
152	187692-3	Switch case set		1			
152		INC. 150					
153	234282-4	Compression spring 12		2			
154	807Y79-0	Clear label		1	*		
A01	123138-5	Side grip assembly		1			
A02	196792-8	Side handle 73 set		1			
A03	194683-7	Grease vessel set		1	*		
A03-1	198993-4	Grease vessel set	<	1			
A04	196278-2	Plastic case set		1	*		
C10	837544-5	Inner tray		1	*		
C20	801Y02-7	Operation label		1	*		
C30	162271-8	Latch		2	*		
A04-1	196277-4	Plastic case set	O	1			
C10	837544-5	Inner tray		1			
C30	162271-8	Latch		2			
A05	331955-1	Depth gauge		1			
A06	443122-7	Cloth		1	*		
A18	8047A0-9	Plastic case label HR4013C		2			
B01	197298-9	Hammer service kit		1			
C10	181490-7	Oil vessel set 30CC		2	*		
C11	1914C5-7	Grease set	O	2			
B01		INC. 1,22-25,31,48,108			*		
B01		INC. 1,22-25,31,47,108					
F02-1	199142-6	Dust extractor attachment set	<	1			
F03-1	199142-6	Dust extractor attachment set	<	1			
F04-1	199143-4	Dust extractor attachment set	<	1			
F05-1	199143-4	Dust extractor attachment set	<	1			
F07-1	199144-2	Dust extractor attachment set	<	1			
C10	417765-1	Front cuff 22		1			
C20	417766-9	Front cuff 38		1			

C30	415021-3	Hose joint		1	*		
C31	415021-3	Hose joint	O	1			
F08-1	199144-2	Dust extractor attachment set	<	1			
C10	417765-1	Front cuff 22		1			
C20	417766-9	Front cuff 38		1			
C30	415021-3	Hose joint		1	*		
C31	415021-3	Hose joint	O	1			
F15	1918R1-4	SEALING CAP B SET		1			
F16	1918L7-0	DUST EXTRACTION PAD SET		1			
F27	1914C6-5	Grease set		1			
G12	1914X3-8	Dust extraction pad set		1			

Please state Parts No. when your order.

Print Date 08/24/2026