Model No.HR3200C Rotary Hammer

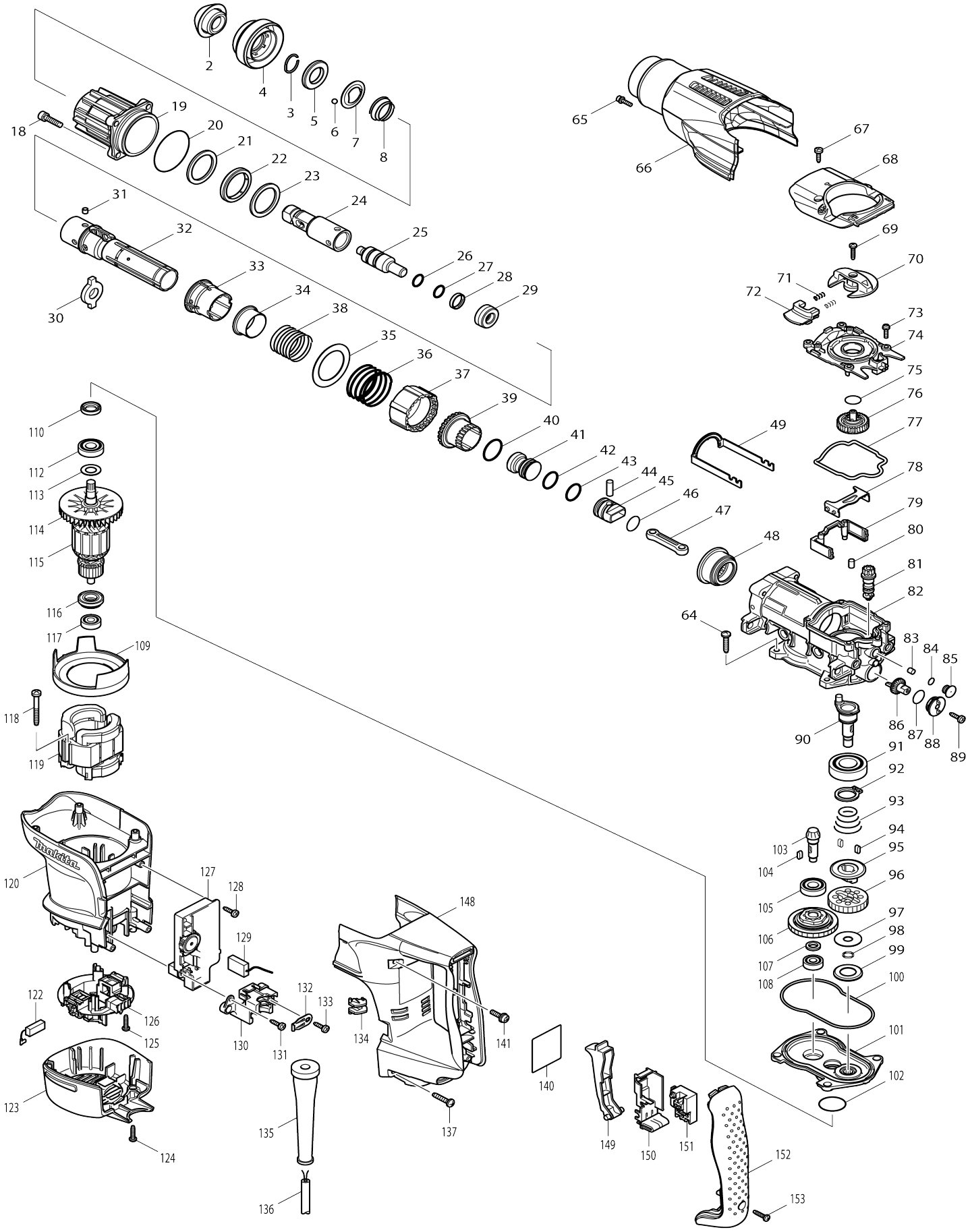

# Model No.HR3200C Rotary Hammer

| Item No. | Parts No. | Description | Interchangeability | Q'ty | New/ Old | Note1 | Note2 |
|---|---|---|---|---|---|---|---|
| 002 | 286282-0 | Tool holder cap | | 1 | | | |
| 003 | 233940-9 | Ring spring 19 | | 1 | | | |
| 004 | 450245-4 | Chuck cover | | 1 | | | |
| 005 | 257288-5 | Ring 21 | | 1 | | | |
| 006 | 216022-2 | Steel ball 7.0 | | 2 | | | |
| 007 | 345873-7 | Guide washer | | 1 | | | |
| 008 | 234049-0 | Conical compression spring 22-32 | | 1 | | | |
| 018 | 922341-3 | Hex. socket head bolt M6X25 W | | 4 | | | |
| 019 | 158533-0 | Barrel complete | | 1 | | | |
| C10 | 213436-6 | Oil seal 28 | | 1 | | | |
| C20 | 213516-8 | O-ring 36 | | 1 | * | | |
| C21 | 213142-3 | O-ring 35 | O | 1 | | | |
| 020 | 213656-2 | O-ring 53 | | 1 | * | | |
| 020-1 | 213A99-4 | O-RING 53 | O | 1 | | | |
| 021 | 267810-0 | Flat washer 34 | | 1 | | | |
| 022 | 262138-1 | Urethane ring 34 | | 1 | | | |
| 023 | 267810-0 | Flat washer 34 | | 1 | | | |
| 024 | 324840-5 | Tool holder | | 1 | | | |
| 025 | 324849-7 | Impact bolt | | 1 | | | |
| 026 | 213228-3 | O-ring 15 | | 1 | | | |
| 027 | 213228-3 | O-ring 15 | | 1 | | | |
| 028 | 213321-3 | Fluoro carbon resin ring 20 | | 1 | | | |
| 029 | 424062-8 | Rubber ring 13 | | 1 | | | |
| 030 | 324838-2 | Slide plate | | 1 | | | |
| 031 | 256266-2 | Pin 6 | | 4 | | | |
| 032 | 331794-9 | Cylinder 25 | | 1 | | | |
| 033 | 450243-8 | Slide sleeve | | 1 | | | |
| 034 | 331805-0 | Ring 29 | | 1 | | | |
| 035 | 267360-5 | Flat washer 40 | | 1 | | | |
| 036 | 234052-1 | Compression spring 42 | | 1 | | | |
| 037 | 450236-5 | Lock sleeve | | 1 | | | |
| 038 | 234050-5 | Compression spring 34 | | 1 | | | |
| 039 | 331795-7 | Driving sleeve | | 1 | | | |
| 040 | 213434-0 | O-ring 26 | | 1 | | | |
| 041 | 324858-6 | Striker | | 1 | | | |
| 042 | 213283-5 | O-ring 18 | | 1 | | | |
| 043 | 213283-5 | O-ring 18 | | 1 | | | |
| 044 | 256087-2 | Pin 7 | | 1 | | | |
| 045 | 324918-4 | Piston | | 1 | | | |
| 046 | 213262-3 | O-ring 18 | | 1 | | | |
| 047 | 450235-7 | Connecting rod | | 1 | | | |
| 048 | 227531-6 | Spiral bevel gear 37 | | 1 | | | |
| 049 | 345867-2 | Link arm | | 1 | | | |
| 064 | 266041-8 | Binding head tapping screw 5X25 | | 4 | | | |
| 065 | 922123-3 | Hex. socket head bolt M4X14 WR | | 1 | | | |
| 066 | 450261-6 | Crank housing cover | | 1 | | | |

| | | | | | | | |
|---|---|---|---|---|---|---|---|
| 067 | 266192-7 | Binding head tapping screw 4X14 | | 2 | | | |
| 068 | 318201-9 | Crank cap cover | | 1 | * | | |
| 068-1 | 318201-9 | Crank cap cover | O | 1 | | | |
| 069 | 265995-6 | Binding head tapping screw 4X18 | | 1 | | | |
| 070 | 450249-6 | Change lever | | 1 | | | |
| 071 | 233436-0 | Compression spring 3 | | 2 | | | |
| 072 | 450250-1 | Lock button | | 1 | | | |
| 073 | 911128-8 | Pan head screw M4X16 WR | | 5 | | | |
| 074 | 450241-2 | Crank cap | | 1 | | | |
| 075 | 213223-3 | O-ring 16 | | 1 | | | |
| 076 | 158437-6 | Spur gear 33 complete | | 1 | | | |
| 077 | 424064-4 | Seal ring B | | 1 | | | |
| 078 | 345868-0 | Link plate | | 1 | | | |
| 079 | 450247-0 | Air pipe | | 1 | * | | |
| 079-1 | 453866-1 | Air pipe | < | 1 | | | |
| 080 | 263005-3 | Rubber pin 6 | | 2 | | | |
| 081 | 450242-0 | Gear shaft | | 1 | * | | |
| 081-1 | 452126-8 | Gear shaft | S | 1 | | | |
| 082 | 158532-2 | Crank housing complete | | 1 | * | | |
| C10 | 213579-4 | O-ring 44 | | 1 | * | | |
| 082-1 | 158713-8 | Crank housing complete | O | 1 | * | | |
| C10 | 213579-4 | O-ring 44 | | 1 | * | | |
| 082-2 | 158713-8 | Crank housing complete | O | 1 | | | |
| C10 | 213579-4 | O-ring 44 | | 1 | | | |
| 083 | 443138-2 | Filter | | 1 | | | |
| 084 | 213030-4 | O-ring 8 | | 1 | | | |
| 085 | 450238-1 | Filter cap | | 1 | | | |
| 086 | 450244-6 | Crank gear | | 1 | | | |
| 087 | 213223-3 | O-ring 16 | | 1 | * | | |
| 087-1 | 213176-6 | O-ring 14 | < | 1 | | | |
| 088 | 450237-3 | Cap holder | | 1 | | | |
| 089 | 266192-7 | Binding head tapping screw 4X14 | | 1 | | | |
| 090 | 324839-0 | Crankshaft | | 1 | | | |
| 091 | 211332-2 | Ball bearing 6004LLU | | 1 | | | |
| 092 | 961060-6 | Retaining ring (EXT) S-20 | | 1 | | | |
| 093 | 231991-6 | Conical compression spring 21-31 | | 1 | | | |
| 094 | 254239-9 | Key 4 | | 2 | | | |
| 095 | 324848-9 | Clutch | | 1 | | | |
| 096 | 227188-3 | Spur gear 33 | | 1 | | | |
| 097 | 253197-6 | Flat washer 10 | | 1 | | | |
| 098 | 961036-3 | Retaining ring (EXT) WR-10 | | 1 | | | |
| 099 | 345869-8 | Cup washer 18 | | 1 | | | |
| 100 | 424063-6 | Seal ring A | | 1 | | | |
| 101 | 158534-8 | Gear housing complete | | 1 | | | |
| 102 | 213415-4 | O-ring 28 | | 1 | | | |
| 103 | 227533-2 | Spiral bevel gear 9 | | 1 | | | |
| 104 | 254239-9 | Key 4 | | 1 | | | |
| 105 | 210105-0 | Ball bearing 6001LLU | | 1 | | | |
| 106 | 125421-6 | Torque limiter assembly | | 1 | | | |

| | | | | | | | |
|---|---|---|---|---|---|---|---|
| 107 | 257291-6 | Ring 10 | | 1 | | | |
| 108 | 210005-4 | Ball bearing 608DDW | | 1 | | | |
| 109 | 450251-9 | Baffle plate | | 1 | | | |
| 110 | 213133-4 | Oil seal 12 | | 1 | | | |
| 112 | 210105-0 | Ball bearing 6001LLU | | 1 | | | |
| 113 | 253084-9 | Flat washer 12 | | 1 | | | |
| 114 | 241863-7 | Fan 70 | | 1 | | | |
| 115 | 513748-0 | Armature assembly 220-240V | | 1 | | | |
| 115 | | INC. 112-114,116,117 | | | | | |
| 116 | 681650-6 | Insulation washer | | 1 | | | |
| 117 | 210005-4 | Ball bearing 608DDW | | 1 | | | |
| 118 | 266056-5 | Binding head tapping screw 5X45 | | 2 | | | |
| 119 | 625813-4 | Field 220-240V | | 1 | | | |
| 120 | 450252-7 | Motor housing | | 1 | | | |
| 122 | 194160-9 | Carbon brush set CB-350 | | 1 | * | | |
| 122-1 | 195004-6 | Carbon brush set CB-350 | O | 1 | * | | |
| 122-2 | 194160-9 | Carbon brush set CB-350 | O | 1 | | | |
| 123 | 450253-5 | Rear cover | | 1 | | | |
| 124 | 265995-6 | Binding head tapping screw 4X18 | | 2 | | | |
| 125 | 265995-6 | Binding head tapping screw 4X18 | | 4 | | | |
| 126 | 638519-5 | Brush holder unit | | 1 | | | |
| 127 | 631784-5 | Controller | | 1 | | | |
| 128 | 266192-7 | Binding head tapping screw 4X14 | | 1 | * | | |
| 128-1 | 266901-4 | Binding head tapping screw 4X14 | < | 1 | | | |
| 129 | 638406-8 | Lead unit | | 1 | | | |
| 130 | 450246-2 | Strain relief base | | 1 | | | |
| 131 | 266192-7 | Binding head tapping screw 4X14 | | 1 | * | | |
| 131-1 | 266901-4 | Binding head tapping screw 4X14 | < | 1 | | | |
| 132 | 687169-3 | Strain relief | | 1 | | | |
| 133 | 266192-7 | Binding head tapping screw 4X14 | | 1 | | | |
| 134 | 450240-4 | Lens | | 1 | | | |
| 135 | 682560-0 | Cord guard 10 | | 1 | | | |
| 136 | 695123-3 | Power supply cord 1.5-2-4.0 | | 1 | | | |
| 137 | 266041-8 | Binding head tapping screw 5X25 | | 2 | | | |
| 140 | 864532-9 | Name plate HR3200C | | 1 | * | | |
| 140-1 | 8580L4-8 | Name plate HR3200C | O | 1 | | | |
| 141 | 911233-1 | Pan head screw M5X20 WR | | 2 | | | |
| 148 | 450262-4 | Handle | | 1 | | | |
| 149 | 419025-7 | Switch lever | | 1 | | | |
| 150 | 154626-1 | Switch holder complete | | 1 | | | |
| 151 | 650567-4 | Switch | | 1 | * | | |
| 151-1 | 650676-9 | Switch C3PA-1111 | < | 1 | | | |
| 152 | 450257-7 | Handle cover | | 1 | | | |
| 153 | 265995-6 | Binding head tapping screw 4X18 | | 1 | | | |
| | | | | | | | |

| | | | | | | | |
|---|---|---|---|---|---|---|---|
| 154 | 267383-3 | Flat washer 22 | | 1 | | | |
| 155 | 267721-9 | Wave washer 15 | | 1 | | | |
| 156 | 213083-3 | O-ring 9 | | 1 | | | |
| A01 | 181573-3 | Grease vessel set | | 1 | * | | |
| A01-1 | 194683-7 | Grease vessel set | O | 1 | * | | |
| A01-2 | 198993-4 | Grease vessel set | < | 1 | | | |
| A02 | 135197-7 | Grip 36 assembly | | 1 | | | |
| C10 | 265701-9 | Thumb screw M6X14 | | 1 | | | |
| C20 | 266163-4 | Round head square neck bolt M8 X80 | | 1 | | | |
| C30 | 321248-4 | Depth gauge | | 1 | | | |
| C40 | 344492-6 | Plate | | 1 | | | |
| C50 | 344811-6 | Grip spring 63 | | 1 | | | |
| C60 | 417026-9 | Side grip base 63 | | 1 | | | |
| C70 | 931302-2 | Hex. nut M6 | | 1 | | | |
| A03 | 824819-1 | Plastic case | | 1 | | | |
| C10 | 163467-4 | Latch | | 2 | | | |
| A04 | 810409-6 | Caution tag | | 1 | | | |
| A05 | 806474-1 | Model No. label HR3200C | | 1 | | | |
| B01 | 195199-5 | Hammer service kit | | 1 | | | |
| C10 | 181490-7 | Oil vessel set 30CC | | 1 | * | | |
| C11 | 1914C5-7 | Grease set | O | 1 | | | |
| B01 | | INC. 2,3,6,7,26-28,42,43,46, | | | | | |
| B01 | | INC. 122 | | | | | |
| F01-1 | 194683-7 | Grease vessel set | O | 1 | | | |
| F04 | 196804-7 | Grease vessel set | | 1 | | | |
| F05 | 197793-9 | Grease vessel set | | 1 | | | |
| F09 | 198993-4 | Grease vessel set | | 1 | | | |
| F10 | 1917K7-7 | Dust extractor attachment set | | 1 | | | |
| F11 | 1918R1-4 | SEALING CAP B SET | | 1 | | | |
| F12 | 1918L7-0 | DUST EXTRACTION PAD SET | | 1 | | | |
| G12 | 1914X3-8 | Dust extraction pad set | | 1 | | | |