Model No.HR2811FT Rotary Hammer

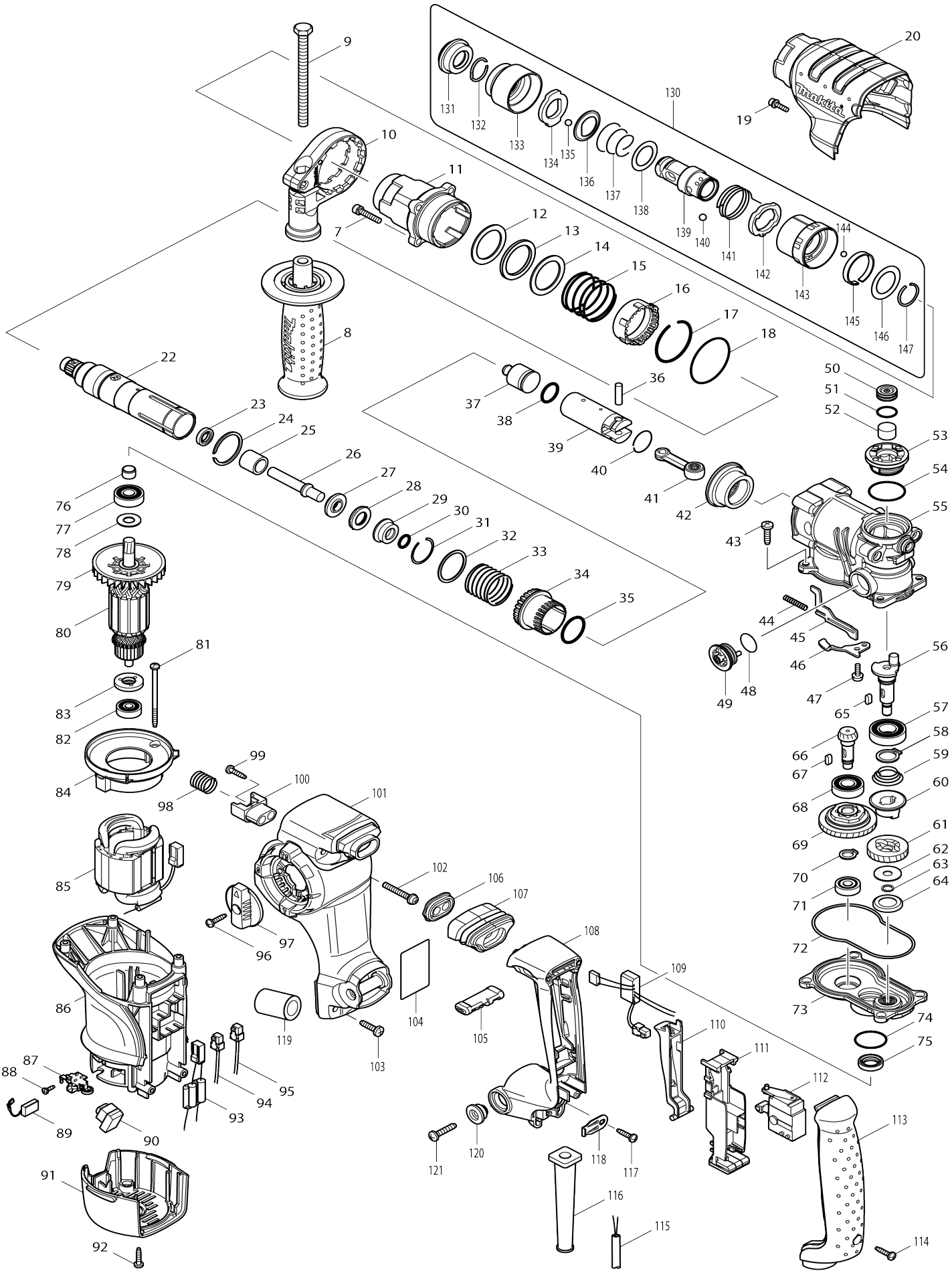

Model No.HR2811FT Rotary Hammer

Item No.	Parts No.	Description	Interchangeability	Q'ty	New/ Old	Note1	Note2
007	922241-7	Hex. socket head bolt M5X25 W		4			
008A	154842-5	Grip 36 complete		1	*		
C10	931402-8	Hex. nut M8		1	*		
008-1A	158057-6	Grip 36 complete	O	1			
C10	931402-8	Hex. nut M8		1			
008-1B	158057-6	Grip 36 complete		1			
C10	931402-8	Hex. nut M8		1			
009	921919-9	Hex. head bolt M8X110		1			
010	419975-6	Grip base 20		1			
011	158288-7	Barrel complete		1			
C10	212403-8	Needle bearing 3012		1			
C21	213345-9	Oil seal 25		1			
012	267354-0	Flat washer 31		1			
013	262133-1	Urethane ring 31		1			
014	267354-0	Flat washer 31		1			
015	234020-4	Compression spring 37		1			
016	419986-1	Lock sleeve		1			
017	233952-2	Ring spring 41		1			
018	213620-3	O-ring 46		1			
019	922128-3	Hex. socket head bolt M4X16 WR		1			
020	419984-5	Crank housing cover		1			
022	158286-1	Tool holder guide complete		1			
023A	213076-0	Oil seal 9		1	*		
023-1A	213344-1	Oil seal 9	O	1			
023-1B	213344-1	Oil seal 9		1			
024	961140-8	Retaining ring (EXT) WR-30		1			
025	331769-8	Sleeve 9		1			
026	324796-2	Impact bolt		1			
027	324402-9	Ring 10		1			
028	421955-0	Cushion ring 13		1			
029	324216-6	O-ring case		1			
030	213073-6	O-ring 9		1			
031	233917-4	Ring spring 28		1			
032	267105-1	Flat washer 29		1			
033	234021-2	Compression spring 30		1			
034	331770-3	Driving sleeve		1			
035	213435-8	O-ring 26		1			
036	256099-5	Pin 6		1			
037	324733-6	Striker		1			
038	213227-5	O-ring 16		1			
039	331776-1	Piston cylinder		1			
040	233954-8	Ring spring 21		1			
041	158282-9	Connecting rod complete		1			
C10	212043-2	Needle bearing 810		1			
042	227532-4	Spiral bevel gear 31		1			

043	266420-0	Binding head tapping screw 5X20		4			
044	234019-9	Compression spring 4		1			
045	345814-3	Link plate		1			
046	345815-1	Guide plate		1			
047	911118-1	Pan head screw M4X12 WR		1			
048	213262-3	O-ring 18		1			
049	162256-4	Link lever complete		1			
050	419988-7	Filter cap		1			
051	213218-6	O-ring 16		1	*		
051-1	213A05-9	O-ring 16	O	1			
052	443129-3	Filter		1			
053	419987-9	Crank cap		1			
054	213406-5	O-ring 30		1			
055A	158289-5	Crank housing complete		1	*		
055-1A	158289-5	Crank housing complete	O	1			
055-1B	158289-5	Crank housing complete		1			
056	324793-8	Crankshaft		1			
057	211232-6	Ball bearing 6002LLU		1			
058	961055-9	Retaining ring (EXT) S-15		1			
059	233951-4	Conical compression spring 16-26		1			
060	223167-9	Clutch		1			
061	226653-9	Helical gear 29		1			
062	267353-2	Flat washer 8		1			
063	961034-7	Retaining ring (EXT) WR-8		1			
064	345818-5	Cup washer 16		1			
065	254239-9	Key 4		2			
066	227524-3	Spiral bevel gear 9		1			
067	254239-9	Key 4		1			
068	210105-0	Ball bearing 6001LLU		1			
069	125386-2	Torque limiter assembly		1			
070	961006-2	Retaining ring (EXT) S-10		1			
071	210024-0	Ball bearing 608 LLU		1			
072	424028-8	Seal ring		1			
073	158287-9	Gear housing complete		1			
074	213445-5	O-ring 26		1			
075	213133-4	Oil seal 12		1	*		
075-1	213678-2	Oil seal 12	O	1			
076	331775-3	Sleeve 10		1			
077	210054-1	Ball bearing 6000LLU		1			
078	253171-4	Flat washer 10		1			
079	240095-3	Fan 64		1			
080	515294-9	Armature assembly 240V		1			
080		INC. 79,82,83					
081	266325-4	Binding head tapping screw 4X70		2			
082	210023-2	Ball bearing 627DDW		1			
083	681656-4	Insulation washer		1			
084	419989-5	Baffle plate		1			
085	526584-5	Field assembly 240V		1			

C10	654283-0	Contact		2			
C20	686044-0	Connector housing		1			
086	419982-9	Motor housing		1			
087	643766-5	Brush holder		2			
088	266421-8	Binding head tapping screw 3X10		2			
089	194074-2	Carbon brush set CB-325		1			
090	631754-4	LED circuit		1			
091	419983-7	Rear cover		1			
092	266326-2	Binding head tapping screw 4X18		2			
093	638568-2	Choke coil unit		1			
094	638567-4	Lead unit		1			
095	638566-6	Lead unit		1			
096	266326-2	Binding head tapping screw 4X18		1			
097	158284-5	Change lever complete		1			
098	234022-0	Compression spring 14		1			
099	266326-2	Binding head tapping screw 4X18		2			
100	419995-0	Spring guide		1			
101	419979-8	Handle base		1			
102	911258-5	Pan head screw M5X35 WR		2			
103	266420-0	Binding head tapping screw 5X20		2			
104	863933-8	Name plate HR2811FT		1			
105	419992-6	F/R change lever		1			
106	419994-2	Dust cover support		1			
107	424029-6	Dust cover		1			
108	419978-0	Handle		1			
109	631753-6	Power supply circuit		1			
110	419990-0	Switch lever		1			
111	158281-1	Switch holder complete		1			
112	650591-7	Switch		1			
113	419980-3	Handle cover		1			
114	266326-2	Binding head tapping screw 4X18		1			
115	665890-4	Power supply cord 1.0-2-4.0		1			
116	682573-1	Cord guard 10		1			
117	266326-2	Binding head tapping screw 4X18		1			
118	687169-3	Strain relief		1			
119	685722-9	Sponge		1			
120	313139-3	Shoulder sleeve 6		2	*		
120-1	459895-2	Shoulder sleeve 6	O	2			
121	266041-8	Binding head tapping screw 5X25		2			
130	194080-7	Tool holder set		1			
130		INC. 131-147					
131	286263-4	Cap 35		1			
132	233940-9	Ring spring 19		1			
133	418217-5	Chuck cover		1			
134	345333-9	Stopper		1			
135	216022-2	Steel ball 7.0		1			

136	345187-4	Guide washer		1			
137	233916-6	Conical compression spring 21-29		1			
138	267279-8	Flat washer 21		1			
139	324355-2	Tool holder		1			
140	216013-3	Steel ball 6		2			
141	231669-1	Torsion spring 31		1			
142	345334-7	Change ring		1			
143	418218-3	Change cover		1			
144	216018-3	Steel ball 5.0		1			
145	345335-5	Leaf spring		1			
146	267270-6	Flat washer 24		1			
147	233924-7	Ring spring 21		1			
148A	819355-0	Clear label		1	*		
148-1A	892373-3	Clear label		1	*		
148-1B	892373-3	Clear label		1			
149A	123197-9	Tool holder guide assembly		1			
149A		INC. 22-31					
149B	123197-9	Tool holder guide assembly		1			
149B		INC. 22-31					
A01	324219-0	Depth gauge		1			
A02A	824789-4	Plastic case		1			
C10	324207-7	Shaft		1			
C20	417724-5	Latch		2			
C30	419216-0	Handle		1			
A02B	821550-0	Connector plastic case (type 2)		1			
C10	453974-8	Latch		4			
A03A	805780-1	Plastic case label HR2811FT		1			
A03B	802S35-9	Plastic case label HR2811FTJ		2			
A04	194079-2	Drill chuck set		1	*		
C10	251425-3	Slotted flat head screw M6X22		1	*		
C20	324353-6	Chuck holder		1	*		
C30	418216-7	Spacer		1	*		
A04-1	194079-2	Drill chuck set	<	1	*		
C20	324353-6	Chuck holder		1	*		
C30	418216-7	Spacer		1	*		
A04-2	194079-2	Drill chuck set	O	1			
C20	324353-6	Chuck holder		1			
C30	418216-7	Spacer		1			
A05B	802S34-1	Indication label HR2811FTJ		1			
A06B	837868-9	Inner tray		1			
B01	195206-4	Hammer service kit		1			
C10	181490-7	Oil vessel set 30CC		2	*		
C11	1914C5-7	Grease set	O	2			
B01		INC. 28,30,31,38,89,131,135					
F04	194254-0	Keyless drill chuck set		1			
F05	192664-5	Keyless drill chuck set		1	*		
F06	1914C6-5	Grease set		1			
F13	192877-8	Drill chuck 13 set		1			
F23	192278-0	Hose complete 28-1.5 set		1			

F24	192349-3	Joint 25 set		1			
F31	1917K7-7	Dust extractor attachment set		1			
F32	122573-4	Chuck adapter assembly		1			
F34	1918R1-4	SEALING CAP B SET		1			
G12	1914X3-8	Dust extraction pad set		1			

Please state Parts No. when your order.

Print Date 08/24/2026