Model No.HR1840 Rotary Hammer

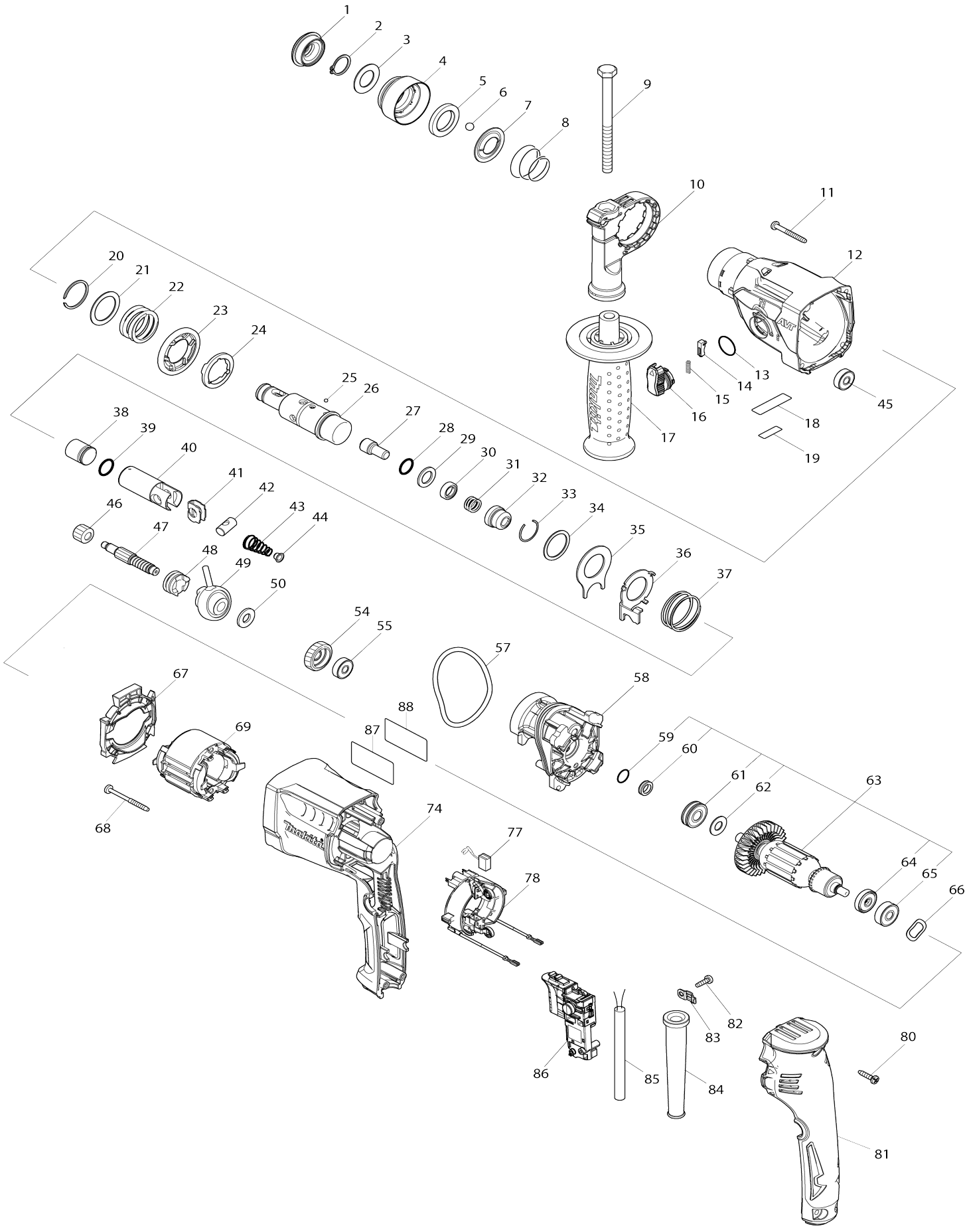

Model No.HR1840 Rotary Hammer

Item No.	Parts No.	Description	Interchangeability	Q'ty	New/ Old	Note1	Note2
001	286037-3	Cap 34		1			
002	961057-5	Retaining ring (EXT) S-17		1			
003	253377-4	Flat washer 17		1			
004	457214-6	Chuck cover		1			
005	257416-2	Ring 21		1			
006	216022-2	Steel ball 7.0		2			
007	346177-0	Guide washer		1			
008	232347-6	Conical compression spring 21-29		1			
009	921923-8	Hex. head bolt M8X120		1			
010	417911-6	Grip base		1			
011	266053-1	Binding head tapping screw 4X35		4			
012	144272-8	Gear housing complete		1			
C10	213636-8	Oil seal 25		1			
C20	211375-4	Ball bearing 6805LLB		1			
013	213278-8	O-ring 17		1			
014	161568-2	Lock button complete		1			
015	232344-2	Compression spring 3		1			
016	161569-0	Change lever complete		1			
017	158057-6	Grip 36 complete		1			
C10	931402-8	Hex. nut M8		1			
018	457356-6	Plate		1			
019	853K43-5	Serial No. label HR1840		1			
020	961135-1	Retaining ring (EXT) WR-25		1	*		
020-1	347555-7	Spiral retaining ring 25	O	1			
021	267304-5	Flat washer 25		1			
022	232360-4	Compression spring 25		1			
023	221494-8	Spur gear 44		1			
024	327039-1	Driving flange		1			
025	216019-1	Steel ball 3		3	*		
025-1	216068-8	Steel ball 3	<	3			
026	326886-7	Tool holder		1			
027	326887-5	Impact bolt		1			
028	213117-2	O-ring 11		1			
029	253380-5	Flat washer 13		1			
030	326888-3	Ring 10		1			
031	232357-3	Compression spring 10A		1			
032	327038-3	Cup sleeve		1			
033	233942-5	Ring spring 22		1			
034	267175-0	Flat washer 24		1			
035	345681-6	Joint plate		1			
036	347128-6	Change plate		1			
037	233458-0	Compression spring 32		1			
038	326889-1	Striker		1			
039	213832-8	O-ring 13		1			
040	326890-6	Piston cylinder		1			
041	347127-8	Guide plate		1			

042	324612-8	Piston joint		1			
043	232361-2	Conical compression spring 6-13		1			
044	347130-9	Spring guide		1			
045	211016-2	Ball bearing 626LLB		1			
046	221495-6	Spur gear 12		1			
047	326892-2	Cam shaft		1			
048	326891-4	Clutch cam		1			
049	219029-7	Swash bearing 9		1			
050	253383-9	Flat washer 9		1			
054	221496-4	Helical gear 23		1			
055	211016-2	Ball bearing 626LLB		1			
057	213833-6	O-ring 60		1			
058	144270-2	Inner housing complete		1			
059	213118-0	O-ring 12		1			
060	326893-0	Ring 9		1			
061	210162-8	Ball bearing 609LLU		1			
062	267231-6	Flat washer 9		1			
063	513989-8	Armature assembly 240V		1			
063		INC. 59-62,64,65					
064	681670-0	Insulation washer		1			
065	210023-2	Ball bearing 627DDW		1			
066	267804-5	Wave washer 15		1			
067	457351-6	Baffle plate B		1			
068	266069-6	Binding head tapping screw 4X45		2			
069	633994-0	Field		1			
074	457353-2	Motor housing B		1			
077	194722-3	Carbon brush set CB-459		1	*		
077-1	195026-6	Carbon brush set CB-459	O	1			
078	632K41-0	Brush holder unit		1			
080	266326-2	Binding head tapping screw 4X18		3			
081	457354-0	Handle cover		1			
082	266385-6	Binding head tapping screw 4X14		1			
083	687682-1	Strain relief		1			
084	682566-8	Cord guard 10		1			
085	665890-4	Power supply cord 1.0-2-4.0		1			
086	651086-3	Switch		1			
087	853K39-6	Name plate HR1840		1			
088	813E00-9	Clear label		1	*		
A01	415486-9	Depth gauge		1			
A02	821706-5	Plastic case		1			
C10	162315-4	Latch		2			
C20	324679-6	Shaft		1			
C30	457340-1	Handle		1			
A03	813D85-9	Plastic case label HR1840		1			
B01	198627-9	Hammer service kit		1			
C10	195127-0	Oil vessel set		1			
B01		INC. 1,2,6,28,33,39,77					
F07	199245-6	Dust cup set		1			
F11	1918R1-4	SEALING CAP B SET		1			

F12	1918L7-0	DUST EXTRACTION PAD SET		1			
G12	1914X3-8	Dust extraction pad set		1			

Please state Parts No. when your order.

Print Date 08/21/2026