Model No.HR166D 16MM CORDLESS ROTARY HAMMER

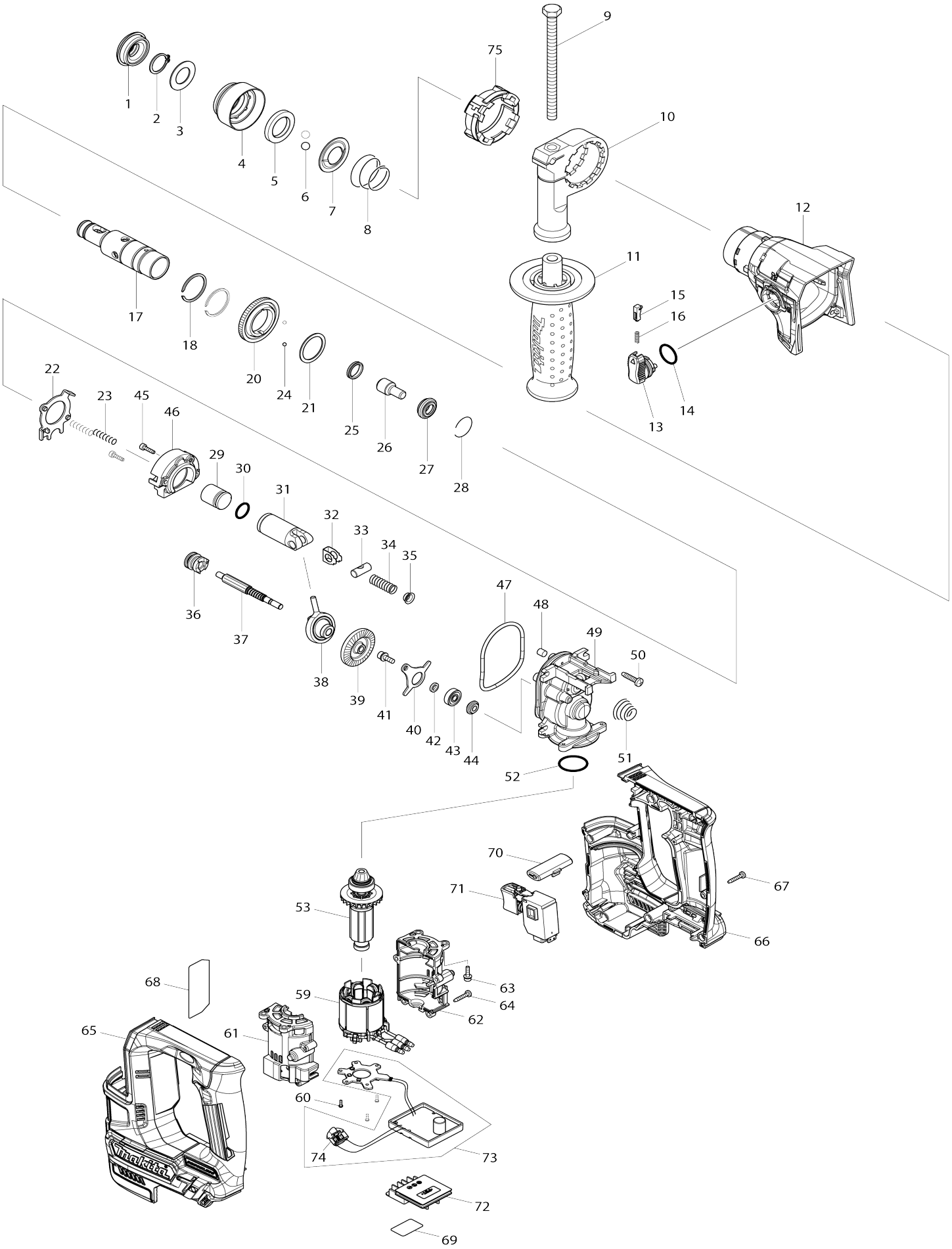

Model No.HR166D 16MM CORDLESS ROTARY HAMMER

Item No.	Parts No.	Description	Interchangeability	Q'ty	New/ Old	Note1	Note2
001	286037-3	Cap 34		1			
002	961057-5	Retaining ring (EXT) S-17		1			
003	253377-4	Flat washer 17		1			
004	457214-6	Chuck cover		1			
005	257416-2	Ring 21		1			
006	216022-2	Steel ball 7.0		2			
007	346177-0	Guide washer		1			
008	232347-6	Conical compression spring 21-29		1			
009	921923-8	Hex. head bolt M8X120		1			
010	417911-6	Grip base		1			
011	158057-6	Grip 36 complete		1			
012	144218-4	Gear housing complete		1			
C10	211375-4	Ball bearing 6805LLB		1	*		
C11	210329-8	Ball bearing 6805LLB	O	1			
C20	213788-5	Oil seal 25		1			
013	161569-0	Change lever complete		1			
014	213278-8	O-ring 17		1			
015	161568-2	Lock button complete		1			
016	232344-2	Compression spring 3		1			
017	326841-9	Tool holder		1	*		
017-1	326841-9	Tool holder	O	1			
018	961135-1	Retaining ring (EXT) WR-25		2			
020	221483-3	Spur gear 57		1			
021	267175-0	Flat washer 24		1			
022	161570-5	Change plate complete		1	*		
022-1	347D59-3	CHANGE PLATE	O	1			
023	233194-8	Compression spring 4		2			
024	216019-1	Steel ball 3		2			
025	213183-9	X-ring 13		1			
026	326843-5	Impact bolt		1			
027	326842-7	Ring 10		1			
028	232343-4	Ring spring 23		1			
029	326844-3	Striker		1			
030	213128-7	O-ring 12		1			
031	319510-9	Piston cylinder		1			
032	347101-6	Guide plate		1			
033	326846-9	Piston joint		1			
034	232346-8	Compression spring 8		1			
035	347102-4	Spring guide		1			
036	326845-1	Clutch cam		1			
037	221482-5	Spur gear 8		1			
038	219026-3	Swash bearing 6		1			
039	221481-7	Spiral bevel gear 37		1			
040	347100-8	Bearing retainer		1			
041	266273-7	Hex. socket head bolt M4X12		1			
042	257415-4	Ring 5		1			
043	210065-6	Ball bearing 625ZZ		1	*		

043-1	210327-2	Ball bearing 625ZZ	O	1			
044	326847-7	Ring 5		1			
045	265910-0	Hex. socket head bolt M3X12		2			
046	144219-2	Inner support complete		1	*		
046-1	144219-2	Inner support complete	O	1	*		
046-2	144219-2	Inner support complete	O	1			
047	213092-2	O-ring 60		1	*		
047-1	213889-9	O-ring 58	<	1			
048	443138-2	Filter		1			
049	319508-6	Inner housing		1	*		
049-1	140N37-0	Inner housing complete	<	1	*		
049-2	312B69-7	Inner housing	<	1			
050	265995-6	Binding head tapping screw 4X18		4			
051	232345-0	Conical compression spring 8-19		1			
052	213008-7	O-ring 22.4		1			
053	619421-1	Rotor		1	*		
053-1	619421-1	Rotor	O	1			
059	629244-9	Stator		1			
060	266490-9	Pan head tapping screw 2X6		3			
061	183G09-0	Motor case set		1			
061		INC. 62					
062	183G09-0	Motor case set		1			
062		INC. 61					
063	251510-2	Hex. socket head bolt M3X12 WRM		4			
064	266130-9	Binding head tapping screw 3X16		4			
065	183G15-5	Housing set		1			
C10	262182-8	Rubber ring 6		2			
C20	263002-9	Rubber pin 4		2			
C30	252126-6	Hex. lock nut M4-7		2			
065		INC. 66					
066	183G15-5	Housing set		1			
C10	262182-8	Rubber ring 6		2			
C20	263002-9	Rubber pin 4		2			
C30	252126-6	Hex. lock nut M4-7		2			
066		INC. 65					
067	266130-9	Binding head tapping screw 3X16		9			
068	853A89-1	Name plate HR166D		1	*		
068-1	853A74-4	Name plate HR166D	<	1			
069	853A95-6	Serial No. label HR166D		1			
070	457210-4	F/R change lever		1			
071	650689-0	Switch C3JW-2B		1			
072	644813-5	Terminal		1			
073	620578-3	Controller		1			
073		INC. 74					
074	620553-9	LED circuit		1			
A01	415486-9	Depth gauge		1			
A02	456128-6	Battery cover		1			
A03	***DC10SA	DC10SA BATTERY CHARGER		1	*		

A03		COMPO-PARTS			*		
A03C	***DC10WC	DC10WC BATTERY CHARGER		1	*		
A03C		COMPO-PARTS			*		
A03-1	***DC10SB	DC10SB BATTERY CHARGER	<	1			
A03-1		COMPO-PARTS					
A03-1C	***DC10WD	DC10WD BATTERY CHARGER	<	1			
A03-1C		COMPO-PARTS					
A04	197402-0	Battery BL1040B set		2	*		
A04D	197394-3	Battery BL1020B set		2	*		
A04-1	197406-2	Battery BL1041B set	<	2	*		
A04-1D	197396-9	Battery BL1021B set	<	2	*		
A04-2	197406-2	Battery BL1041B set	O	2			
A04-2D	197396-9	Battery BL1021B set	O	2			
A05	821550-0	Connector plastic case (type 2)		1			
C10	453974-8	Latch		4			
A05D	821736-6	Plastic case		1	*		
C10	455522-9	Slide latch		2	*		
A05-1D	183H61-4	Plastic case set	S	1			
C10	455522-9	Slide latch		2			
A06	838683-4	Inner tray		1	*		
A06-1	839245-1	Inner tray	S	1			
A07B	812K54-9	Indication label HR166DSMJ		1	*		
A07C	812K71-9	Indication label HR166DWMJ		1	*		
A07-1B	812K53-1	Indication label HR166DSMJ	<	1			
A07-1C	812K70-1	Indication label HR166DWMJ	<	1			
A08B	812K55-7	Plastic case label HR166DSMJ		2			
A08C	812K72-7	Plastic case label HR166DWMJ		2			
A09	835121-7	Sponge 60-80	S	1	*		
A10D	443122-7	Cloth		1	*		
A11D	B-57043	65PCS BIT SET		1	*		
A12D	181573-3	Grease vessel set		1	*		
A12-1D	1914C6-5	Grease set	O	1			
B01	198564-7	Hammer service kit		1			
C10	195127-0	Oil vessel set		1			
B01		INC. 1,2,6,25,28,30					
B02	191D07-2	Side grip set		1			
B02		INC. 9-11,A01					
E01	818S14-7	Clear label		1	*		
F15	198968-3	Battery BL1016 set		1	*		
F16	198969-1	Battery BL1016 set (2 pcs)		1	*		
F17-1	198970-6	Battery BL1021B set (2 pcs)	O	1	*		
F18-1	199002-2	Battery BL1041B set (2 pcs)	O	1	*		
F20	199245-6	Dust cup set		1			
F27	1914C6-5	Grease set		1			
G12	1914X3-8	Dust extraction pad set		1			