Model No.HR012G Cordless Combination Hammer

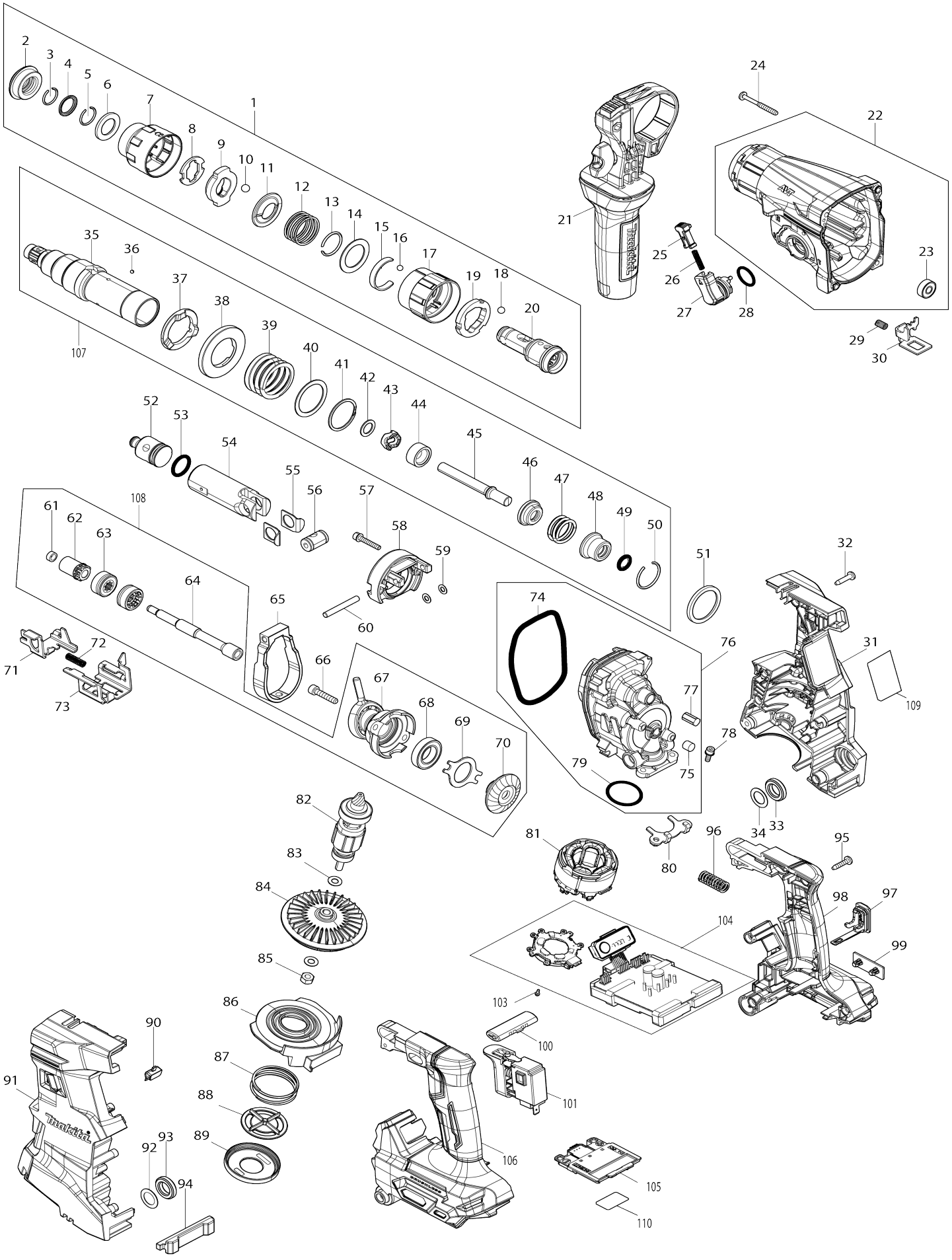

Model No.HR012G Cordless Combination Hammer

Item No.	Parts No.	Description	Interchangeability	Q'ty	New/ Old	Note1	Note2
001	127219-7	Tool holder assembly		1			
001		INC. 2-20					
002	422570-3	Cap 35		1			
003	233989-9	Ring spring 14		1			
004	346834-0	Washer 16		1			
005	233992-0	Ring spring 15		1			
006	253467-3	Washer 17		1			
007	459162-5	Chuck cover		1			
008	347687-0	Plate		1			
009	310926-1	Stopper		1			
010	216022-2	Steel ball 7.0		2			
011	347745-2	Guide washer		1			
012	232554-1	Compression spring 26		1			
013	233924-7	Ring spring 21		1			
014	253468-1	Flat washer 24		1			
015	232555-9	Leaf spring		1			
016	216018-3	Steel ball 5.0		1			
017	459159-4	Change cover A		1			
018	216013-3	Steel ball 6		3			
019	347496-7	Change ring A		1			
020	327264-4	Tool holder		1			
021	122K22-7	Grip assembly		1			
C10	265625-9	Thumb screw M6X50		1			
022	137389-4	GEAR HOUSING SET		1			
022		INC. 23					
023	210028-2	Ball bearing 606ZZ		1			
024	266560-4	Binding head tapping screw 4X40		4			
025	457709-9	Lock button		1			
026	234264-6	Compression spring 3		1			
027	161656-5	Change lever complete		1			
028	213278-8	O-ring 17		1			
029	233360-7	Compression spring 4		1			
030	347E07-8	Lock plate		1			
031	1831S4-7	HOUSING SET		1			
031		INC. 91					
032	266326-2	Binding head tapping screw 4X18		9			
033	459184-5	Cushion ring 12		1			
034	253798-0	Flat washer 13		1			
035	1412E4-1	Tool holder guide complete		1			
036	216068-8	Steel ball 3		3			
037	327D75-1	Driving flange		1			
038	227C33-0	Spur gear 40		1			
039	232952-9	Compression spring 31		1			
040	267153-0	Flat washer 30		1			
041	257932-4	Spiro lock washer 30		1			
042	253634-0	Flat washer 11		1			

043	422C70-1	Cushion sleeve 11		1			
044	327F69-8	Sleeve 9		1			
045	327F76-1	Impact bolt B		1			
046	327F73-7	Washer 10		1			
047	232969-2	Compression spring 20		1			
048	327F72-9	O-ring case		1			
049	213073-6	O-ring 9		1			
050	233979-2	Ring spring 28		1			
051	347D13-7	Ring 30		1			
052	327F70-3	Striker		1			
053	213258-4	O-ring 17.5		1			
054	312J32-8	Piston cylinder		1			
055	347E05-2	Guide plate		2			
056	327F74-5	Piston joint		1			
057	922148-7	Hex. socket head bolt M4X25 WR		2			
058	1412E1-7	Inner support complete		1			
059	253811-4	Flat washer 5		2			
060	256573-3	Pin 5		1			
061	257A41-5	Ring 6		1			
062	227B56-2	Spur gear 9		1			
063	327F77-9	Clutch cam		2			
064	327F75-3	Cam shaft		1			
065	313664-4	Counter weight		1			
066	265F03-9	Hex. socket head bolt M5X25		2			
067	219041-7	Swash bearing 10		1			
068	210302-8	Ball bearing 6903ZZ		1			
069	347E06-0	Bearing retainer B		1			
070	227C31-4	Spiral bevel gear 29		1			
071	347E09-4	Change plate B		1			
072	234343-0	Compression spring 5		1			
073	347E08-6	Change plate A		1			
074	213850-6	O-ring 74		1			
075	443153-6	Felt		1			
076	137392-5	INNER HOUSING ASS'Y		1			
076		INC. 74,75,77,79					
077	263045-1	Rubber pin 8		1			
078	922118-6	Hex. socket head bolt M4X12 WR		2			
079	213415-4	O-ring 28		1			
080	347E10-9	Bearing retainer A		1			
081	629D40-9	Stator		1			
082	619911-4	Rotor		1			
083	253715-0	Flat washer 6		2			
084	240262-0	Fan 65		1			
085	252186-8	Hex. nut M6		1			
086	4133C3-8	Air duct		1			
087	232796-7	Compression spring 37		1			
088	413N14-8	Valve		1			
089	413N15-6	Cap		1			
090	620S12-7	LED circuit		1			
091	1831S4-7	HOUSING SET		1			
091		INC. 31					
092	253798-0	Flat washer 13		1			

093	459184-5	Cushion ring 12		1			
094	422C71-9	Battery cushion		1			
095	266326-2	Binding head tapping screw 4X18		5			
096	232953-7	Compression spring 8		1			
097	140G30-2	Cap complete		1			
C10	213A05-9	O-ring 16		1			
098	1831S1-3	HANDLE SET		1			
C10	263005-3	Rubber pin 6		2			
098		INC. 106					
099	459753-2	Cap		1			
100	453124-5	F/R change lever		1			
101	651439-6	Switch C3JR-4B-2		1			
103	652119-7	Pan head screw M2X6		6			
104	137396-7	CONTROLLER ASS'Y		1			
105	632P64-8	Terminal unit		1			
106	1831S1-3	HANDLE SET		1			
C10	263005-3	Rubber pin 6		2			
106		INC. 98					
107	137397-5	TOOL HOLDER ASS'Y		1			
107		INC. 35-50					
108	137391-7	CAM SHAFT ASS'Y		1			
108		INC. 61-64,67-70					
109	8152G1-4	HR012G NAME PLATE		1			
110	8152G2-2	HR012G SERIAL NO. LABEL		1			
A01	331886-4	Depth gauge		1			
A02	198993-4	Grease vessel set		1			
A03	191F46-4	Drill chuck set		1	*		
A03-1	191F46-4	Drill chuck set	O	1			
A04	821552-6	Connector plastic case (type 4)		1			
C10	453974-8	Latch		4			
A05	836491-7	INNER TRAY		1			
A06	***DC40RA	DC40RA FAST CHARGER		1			
A06		COMPO-PARTS					
A07	412393-7	Battery cover		2			
A08	191B26-6	Battery BL4040 set		2			
A08	1917Y6-7	Battery BL4040F set		2			
A09	***DX18	DX18 DUST COLLECTION SYSTEM		1			
A09		COMPO-PARTS					
A10	422784-4	Sealing cap		5			
F03	191F46-4	Drill chuck set		1			
F04	191F47-2	Tool holder set		1			
F05	191W90-3	Hook set		1			
F06	1914L8-4	Dust cup set		1			
F07	1914M0-7	Dust cup set		1			
F08	1916C0-9	Dust case set		1			
F09	192877-8	Drill chuck 13 set		1			
F11	192892-2	Keyless drill chuck set		1			
F13	194041-7	Drill chuck set		1			
F14	194254-0	Keyless drill chuck set		1			
F15	194683-7	Grease vessel set		1			

F16	198900-7	Wireless unit set		1			
F18	198993-4	Grease vessel set		1			
F21	199596-7	Filter set		1			
F30	1917K7-7	Dust extractor attachment set		1			
F31	1918R1-4	SEALING CAP B SET		1			
F32	1918L7-0	DUST EXTRACTION PAD SET		1			

Please state Parts No. when your order.

Print Date 08/21/2026