Model No.HM1512 ELECTRIC BREAKER

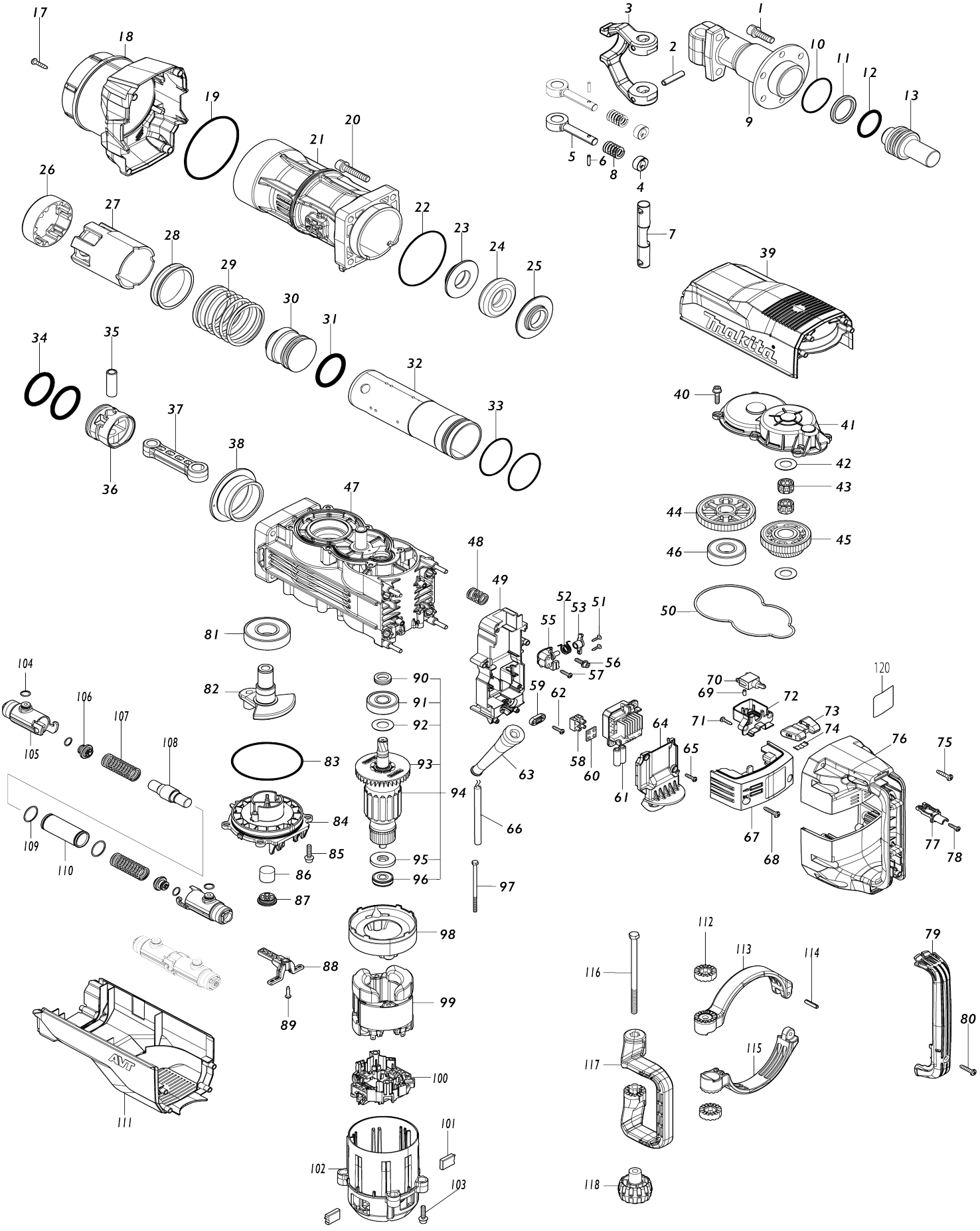

Model No.HM1512 ELECTRIC BREAKER

Item No.	Parts No.	Description	Interchangeability	Q'ty	New/ Old	Note1	Note2
001	265B53-0	Hex. socket head bolt M10X35 W M		6			
002	951272-9	Spring pin 8-40		2			
003	325895-3	Tool retainer		1			
004	322560-5	Retaining ring		2			
005	322477-2	Tool retainer pole		2			
006	256219-1	Pin 4		2			
007	324238-6	Tool retainer shaft		1			
008	233083-7	Compression spring 12		2			
009	313323-0	Tool holder B		1			
010	213670-8	O-ring 58		1			
011	213911-2	X-ring 38		1			
012	213912-0	O-ring 40		1			
013	327669-8	Impact bolt B		1			
017	266041-8	Binding head tapping screw 5X25		4			
018	412874-1	Barrel cover		1			
019	213916-2	O-ring 106		1			
020	265B55-6	Hex. socket head bolt M10X50 W M		4			
021	313324-8	Barrel		1			
022	213806-9	O-ring 90		1			
023	327667-2	Shoulder ring 30B		1			
024	262196-7	Rubber ring 31		1			
025	327666-4	Shoulder ring 30A		1			
026	313321-4	Guide ring		1			
027	412859-7	Slide sleeve		1			
028	327664-8	Sleeve 65		1			
029	232646-6	Compression spring 66		1			
030	327665-6	Striker		1			
031	213913-8	O-ring 48		1			
032	327662-2	Cylinder 59		1			
033	213656-2	O-ring 53		2	*		
033-1	213A99-4	O-RING 53	O	2			
034	213913-8	O-ring 48		2			
035	327663-0	Pipe 15		1			
036	412858-9	Piston		1			
037	412857-1	Connecting rod		1			
038	327661-4	Spacer		1			
039	412875-9	Top cover		1			
040	266923-4	Hex. socket head bolt M6X25 GM		6			
041	413211-2	Gear cover		1			
042	267487-1	Flat washer 17		2			
043	212230-3	Needle cage 1715		2			
044	227832-2	Helical gear 53		1			
045	227833-0	Gear complete 31-45		1			
046	210234-9	Ball bearing 2216LLB		1			
047	140W38-2	Crank housing A complete		1			

048	232644-0	Compression spring 16A		4			
049	412868-6	Controller case		1			
050	422636-9	Seal ring		1			
051	263046-9	Tapping screw 3X14		2			
052	232643-2	Torsion spring 13		1			
053	140W48-9	Lever complete		1			
055	412871-7	Base		1			
056	266903-0	Hex. socket head bolt M5X20 WR		2			
057	265995-6	Binding head tapping screw 4X18		2			
058	654741-6	Terminal block		2			
059	687053-2	Strain relief		1			
060	685756-2	Rubber sheet		2			
061	620E02-6	Controller		1			
C10	688165-4	Line filter		2			
062	265995-6	Binding head tapping screw 4X18		2			
063	682560-0	Cord guard 10		1			
064	412869-4	Cord cover		1			
065	265995-6	Binding head tapping screw 4X18		4			
066	695123-3	Power supply cord 1.5-2-4.0		1			
067	140W49-7	Controller cover complete		1			
068	266041-8	Binding head tapping screw 5X25		2			
069	263027-3	Rubber pin 4		1			
070	651423-1	Switch ST115A-43		1	*		
070-1	651423-1	Switch ST115A-43	O	1			
071	265995-6	Binding head tapping screw 4X18		2			
072	412878-3	Switch holder		1			
073	451112-6	Slide lever		1			
074	232209-8	Leaf spring		1			
075	266041-8	Binding head tapping screw 5X25		8			
076	140W50-2	Handle complete		1			
C10	263044-3	Rubber pin 6		4			
077	412879-1	Switch support		1			
078	265995-6	Binding head tapping screw 4X18		1			
079	412880-6	Handle cover		1			
080	266041-8	Binding head tapping screw 5X25		1			
081	210233-1	Ball bearing 2818LLU		1			
082	327660-6	Crankshaft		1			
083	213914-6	O-ring 100		1			
084	412862-8	Crank cap A		1			
085	266923-4	Hex. socket head bolt M6X25 GM		4			
086	443127-7	Filter		1			
087	424668-2	Filter cap		1			
088	412867-8	Filter guide		1			
089	265995-6	Binding head tapping screw 4X18		1			
090	332129-7	Screw seal		1			

091	211152-4	Ball bearing 6303LLU		1			
092	267487-1	Flat washer 17		1			
093	240213-3	Fan 80		1			
094	515544-2	Armature assembly 240V		1			
094		INC. 90-93,95,96					
095	681630-2	Insulation washer		1			
096	210232-3	Ball bearing 6200DDW		1			
097	265B54-8	Hex. head bolt M5X95 GM		2			
098	412861-0	Baffle plate		1			
099	634749-6	Field		1			
100	632R65-8	Brush holder unit		1			
101	197129-2	Carbon brush set CB-218		1			
102	412860-2	Motor housing		1			
103	266923-4	Hex. socket head bolt M6X25 GM		4			
104	213058-2	O-ring 10		8			
105	412865-2	Pipe holder		4			
106	412866-0	Spring guide		4			
107	232642-4	Compression spring 18		4			
108	327679-5	Counter weight		2			
109	213915-4	O-ring 25		4			
110	327680-0	Pipe 22		2			
111	412876-7	Rear cover A		1			
112	417002-3	Side handle cam		2			
113	312A28-5	Side handle base A		1			
114	951166-8	Spring pin 5-24		1			
115	312A29-3	Side handle base B		1			
116	265439-6	Hex. head bolt M8X150		1			
117	412881-4	Side handle		1			
118	252640-2	Thumb nut M8		1			
120	858C66-0	Name plate HM1512		1			
A01	D-17631	BULL POINT 410		1	*		
A01-1	D-17631	BULL POINT 410	<	1			
A02	821836-2	Plastic case		1	*		
A02-1	821839-6	Plastic case	O	1			
A03	8028G5-1	Plastic case label HM1512		2			
B01	191M24-6	Hammer service kit		1			
C10	181490-7	Oil vessel set 30CC		4	*		
C11	1914C5-7	Grease set	O	4			
B01		INC. 11,12,31,34,101					
E01	8027J9-8	Sound label XXdB		1	*		
E01-1	801095-4	Sound label 106dB	<	1			
F01	191M20-4	Dust extractor attachment set		1			
F02	191M21-2	Dust extractor attachment set		1			