Model No.HM1802 Electric Breaker

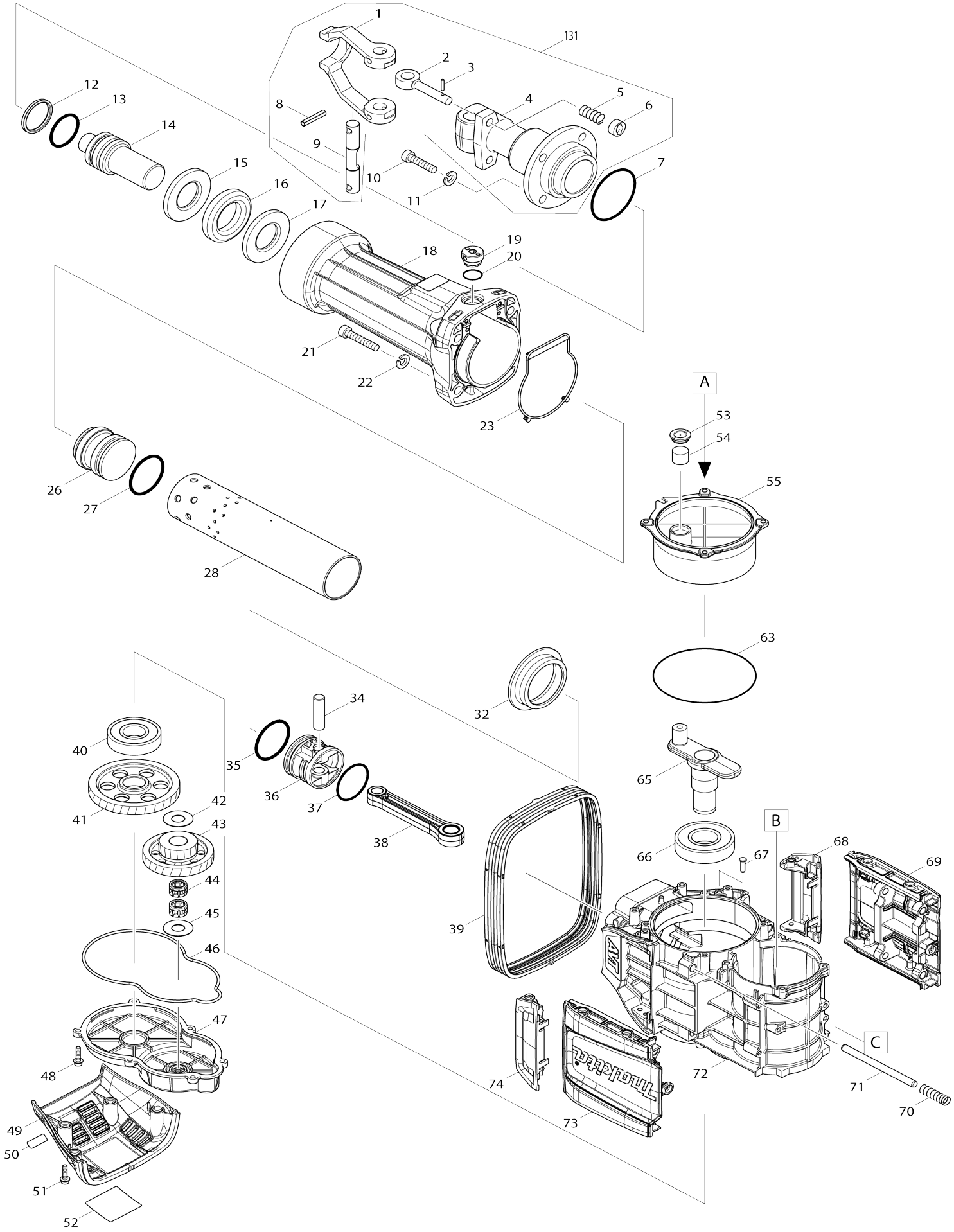

Model No.HM1802 Electric Breaker

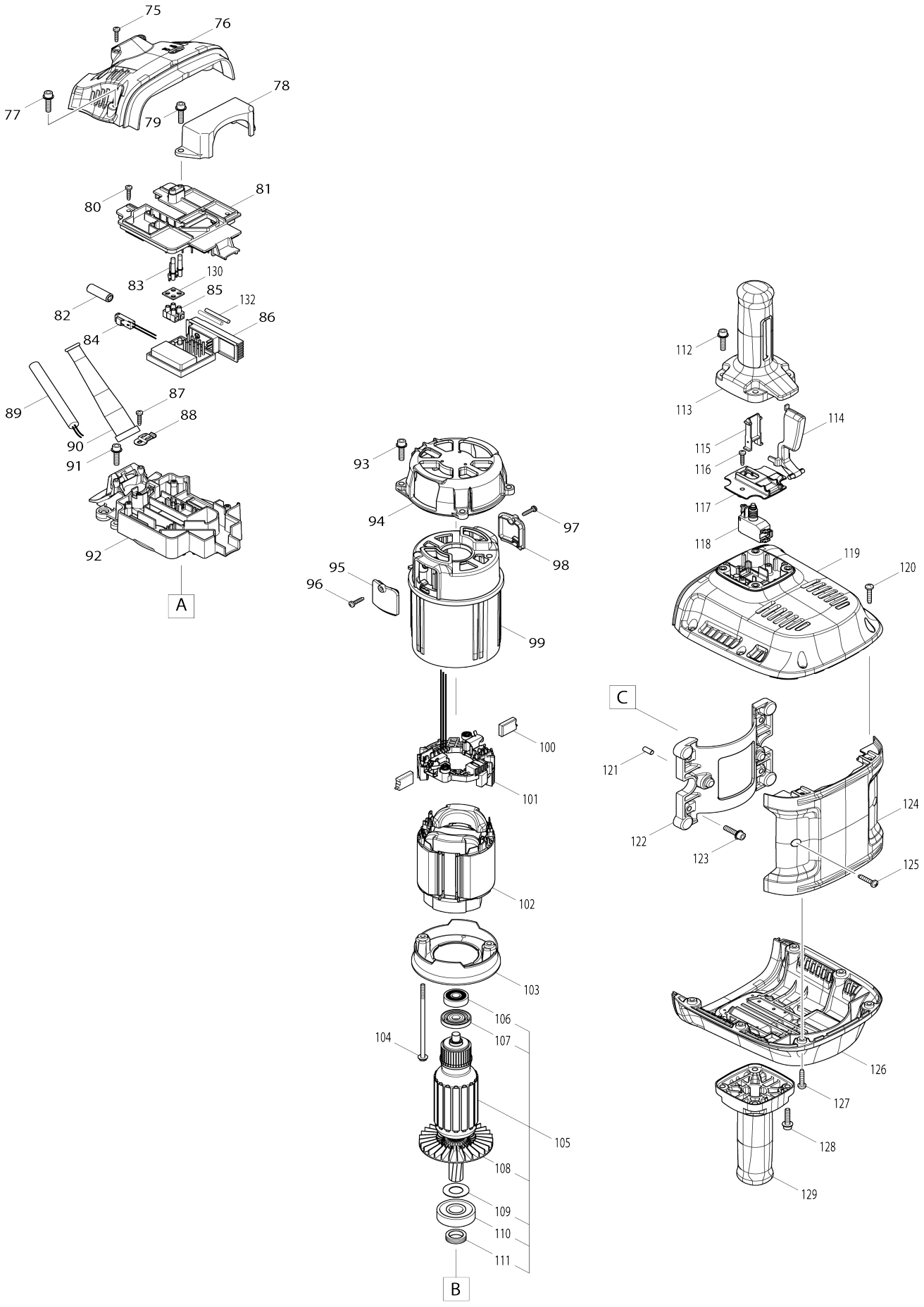

# Model No.HM1802 Electric Breaker

| Item No. | Parts No. | Description | Interchangeability | Q'ty | New/ Old | Note1 | Note2 |
|---|---|---|---|---|---|---|---|
| 001 | 324236-0 | Tool retainer | | 1 | | | |
| 002 | 322477-2 | Tool retainer pole | | 2 | | | |
| 003 | 256219-1 | Pin 4 | | 2 | | | |
| 004 | 310616-6 | Tool holder 29 | | 1 | | | |
| 005 | 233083-7 | Compression spring 12 | | 2 | | | |
| 006 | 322560-5 | Retaining ring | | 2 | | | |
| 007 | 213757-6 | O-ring 80 | | 1 | | | |
| 008 | 951272-9 | Spring pin 8-40 | | 2 | * | | |
| 008-1 | 258071-3 | Spring pin 8-40 | O | 2 | | | |
| 009 | 324238-6 | Tool retainer shaft | | 1 | | | |
| 010 | 265989-1 | Hex. socket head bolt M12X45 | | 4 | | | |
| 011 | 942301-9 | Spring washer 12 | | 4 | | | |
| 012 | 213797-4 | X-ring 47 | | 1 | | | |
| 013 | 213798-2 | O-ring 47 | | 1 | | | |
| 014 | 326469-3 | Impact bolt | | 1 | | | |
| 015 | 332127-1 | Washer 42 | | 1 | | | |
| 016 | 262174-7 | Rubber ring 47 | | 1 | | | |
| 017 | 332127-1 | Washer 42 | | 1 | | | |
| 018 | 319218-5 | Barrel | | 1 | * | | |
| 018-1 | 312K50-2 | BARREL | O | 1 | | | |
| 019 | 450347-6 | Cap | | 1 | | | |
| 020 | 213953-6 | O-ring 24 | | 1 | | | |
| 021 | 922677-0 | Hex. socket head bolt M12X55 | | 4 | | | |
| 022 | 942301-9 | Spring washer 12 | | 4 | | | |
| 023 | 424666-6 | Seal ring A | | 1 | | | |
| 026 | 326470-8 | Striker | | 1 | | | |
| 027 | 213799-0 | O-ring 56 | | 1 | | | |
| 028 | 332130-2 | Cylinder liner 66 | | 1 | | | |
| 032 | 332131-0 | Spacer | | 1 | | | |
| 034 | 268328-4 | Pin 15C | | 1 | | | |
| 035 | 213799-0 | O-ring 56 | | 1 | | | |
| 036 | 455509-1 | Piston | | 1 | | | |
| 037 | 213662-7 | O-ring 55 | | 1 | | | |
| 038 | 455490-6 | Connecting rod | | 1 | | | |
| 039 | 424669-0 | Bellows | | 1 | | | |
| 040 | 211151-6 | Ball bearing 6306LLB | | 1 | | | |
| 041 | 227797-8 | Helical gear 57 | | 1 | | | |
| 042 | 267290-0 | Flat washer 18 | | 1 | | | |
| 043 | 226834-5 | Gear complete 23-59 | | 1 | | | |
| 044 | 212099-5 | Needle cage 1816 | | 2 | | | |
| 045 | 267290-0 | Flat washer 18 | | 1 | | | |
| 046 | 424667-4 | Seal ring B | | 1 | | | |
| 047 | 455491-4 | Gear cover | | 1 | | | |
| 048 | 266923-4 | Hex. socket head bolt M6X25 GM | | 6 | | | |
| 049 | 455500-9 | Side cover B | | 1 | | | |
| 050 | 850X58-1 | Serial No. label HM1802 | | 1 | | | |
| 051 | 266923-4 | Hex. socket head bolt M6X25 GM | | 4 | | | |

| | | | | | | | |
|---|---|---|---|---|---|---|---|
| 052 | 850U11-9 | Name plate HM1802 | | 1 | | | |
| 053 | 424668-2 | Filter cap | | 1 | | | |
| 054 | 443127-7 | Filter | | 1 | | | |
| 055 | 455513-0 | Crank cap | | 1 | | | |
| 063 | 213902-3 | O-ring 135 | | 1 | | | |
| 065 | 310618-2 | Crankshaft | | 1 | | | |
| 066 | 211500-7 | Ball bearing 6307LLU | | 1 | | | |
| 067 | 256559-7 | Flat fillister HD. pin 6 | | 4 | | | |
| 068 | 455506-7 | Handle C | | 1 | | | |
| 069 | 455503-3 | Center cover | | 1 | | | |
| 070 | 234350-3 | Compression spring 12B | | 4 | | | |
| 071 | 326471-6 | Rod 10 | | 4 | | | |
| 072 | 142923-7 | Crank housing complete | | 1 | | | |
| 073 | 455503-3 | Center cover | | 1 | | | |
| 074 | 455506-7 | Handle C | | 1 | | | |
| 075 | 265995-6 | Binding head tapping screw 4X18 | | 2 | | | |
| 076 | 455499-8 | Side cover A | | 1 | | | |
| 077 | 266923-4 | Hex. socket head bolt M6X25 GM | | 4 | | | |
| 078 | 455510-6 | Bracket | | 1 | | | |
| 079 | 266923-4 | Hex. socket head bolt M6X25 GM | | 2 | | | |
| 080 | 265995-6 | Binding head tapping screw 4X18 | | 3 | | | |
| 081 | 455495-6 | Cap cover | | 1 | | | |
| 082 | 688165-4 | Line filter | | 2 | | | |
| 083 | 455514-8 | Lens | | 1 | | | |
| 084 | 632E02-4 | Lead unit | | 1 | | | |
| 085 | 654531-7 | Terminal block | | 1 | | | |
| 086 | 620363-4 | Controller | | 1 | | | |
| 087 | 265995-6 | Binding head tapping screw 4X18 | | 1 | | | |
| 088 | 687169-3 | Strain relief | | 1 | | | |
| 089 | 695123-3 | Power supply cord 1.5-2-4.0 | | 1 | | | |
| 090 | 682560-0 | Cord guard 10 | | 1 | | | |
| 091 | 266923-4 | Hex. socket head bolt M6X25 GM | | 2 | | | |
| 092 | 455494-8 | Crank housing cap | | 1 | | | |
| 093 | 266923-4 | Hex. socket head bolt M6X25 GM | | 4 | | | |
| 094 | 319220-8 | Bearing box | | 1 | | | |
| 095 | 455498-0 | Brush holder cover | | 1 | | | |
| 096 | 265995-6 | Binding head tapping screw 4X18 | | 1 | | | |
| 097 | 265995-6 | Binding head tapping screw 4X18 | | 1 | | | |
| 098 | 455498-0 | Brush holder cover | | 1 | | | |
| 099 | 455496-4 | Motor housing | | 1 | | | |
| 100 | 197129-2 | Carbon brush set CB-218 | | 1 | | | |
| 101 | 632E01-6 | Brush holder unit | | 1 | * | | |
| 101-1 | 632L58-9 | Brush holder unit | < | 1 | | | |
| 102 | 636409-6 | Field 240V | | 1 | | | |
| 103 | 455497-2 | Baffle plate | | 1 | | | |
| 104 | 266922-6 | Hex. head bolt M5X120 GM | | 2 | | | |
| 105 | 517914-1 | Armature assembly 240V | | 1 | | | |
| 105 | | INC. 106-111 | | | | | |

| | | | | | | | |
|---|---|---|---|---|---|---|---|
| 106 | 211087-9 | Ball bearing 6200DDW | | 1 | | | |
| 107 | 681630-2 | Insulation washer | | 1 | | | |
| 108 | 240156-9 | Fan 90 | | 1 | | | |
| 109 | 267487-1 | Flat washer 17 | | 1 | | | |
| 110 | 211152-4 | Ball bearing 6303LLU | | 1 | | | |
| 111 | 332129-7 | Screw seal | | 1 | | | |
| 112 | 266923-4 | Hex. socket head bolt M6X25 GM | | 4 | | | |
| 113 | 455504-1 | Handle A | | 1 | | | |
| 114 | 455508-3 | Switch lever | | 1 | | | |
| 115 | 455511-4 | Switch guide | | 1 | | | |
| 116 | 265995-6 | Binding head tapping screw 4X18 | | 1 | | | |
| 117 | 455507-5 | Switch cover | | 1 | | | |
| 118 | 650738-3 | Switch C3JW-C-P | | 1 | | | |
| 119 | 455502-5 | Handle base A | | 1 | | | |
| 120 | 266041-8 | Binding head tapping screw 5X25 | | 6 | | | |
| 121 | 256269-6 | Pin 6 | | 2 | | | |
| 122 | 319222-4 | Base | | 1 | | | |
| 123 | 266923-4 | Hex. socket head bolt M6X25 GM | | 4 | | | |
| 124 | 455501-7 | Head cover | | 1 | | | |
| 125 | 266041-8 | Binding head tapping screw 5X25 | | 2 | | | |
| 126 | 455512-2 | Handle base B | | 1 | | | |
| 127 | 266041-8 | Binding head tapping screw 5X25 | | 6 | | | |
| 128 | 266923-4 | Hex. socket head bolt M6X25 GM | | 4 | | | |
| 129 | 455505-9 | Handle B | | 1 | | | |
| 130 | 685756-2 | Rubber sheet | | 1 | | | |
| 131 | 135669-2 | Tool holder assembly | | 1 | | | |
| 131 | | INC. 1-6,8,9 | | | | | |
| 132 | 684970-7 | Glass cloth tube 3.5-45 | | 2 | * | | |
| 132-1 | 684670-9 | Varnished polyester tube 5-35 | O | 2 | * | | |
| 132-2 | 683B60-5 | SILICONE RUBBER GLASS TUBE | O | 2 | | | |
| A01 | 783203-8 | Hex. wrench 5 | | 1 | | | |
| A02 | B-10372 | 28.6MM HEX SELF SHARPENING | | 1 | | | |
| B01 | 197127-6 | Hammer service kit | | 1 | | | |
| C10 | 181490-7 | Oil vessel set 30CC | | 5 | * | | |
| C11 | 1914C5-7 | Grease set | O | 5 | | | |
| B01 | | INC. 12,13,27,35,100 | | | | | |
| E01 | 801S45-3 | Sound 108dB label | | 1 | | | |
| F01 | 197148-8 | Dust extractor attachment set | | 1 | | | |
| F02 | 197168-2 | Dust extractor attachment set | | 1 | | | |