Model No.HM1502 ELECTRIC BREAKER

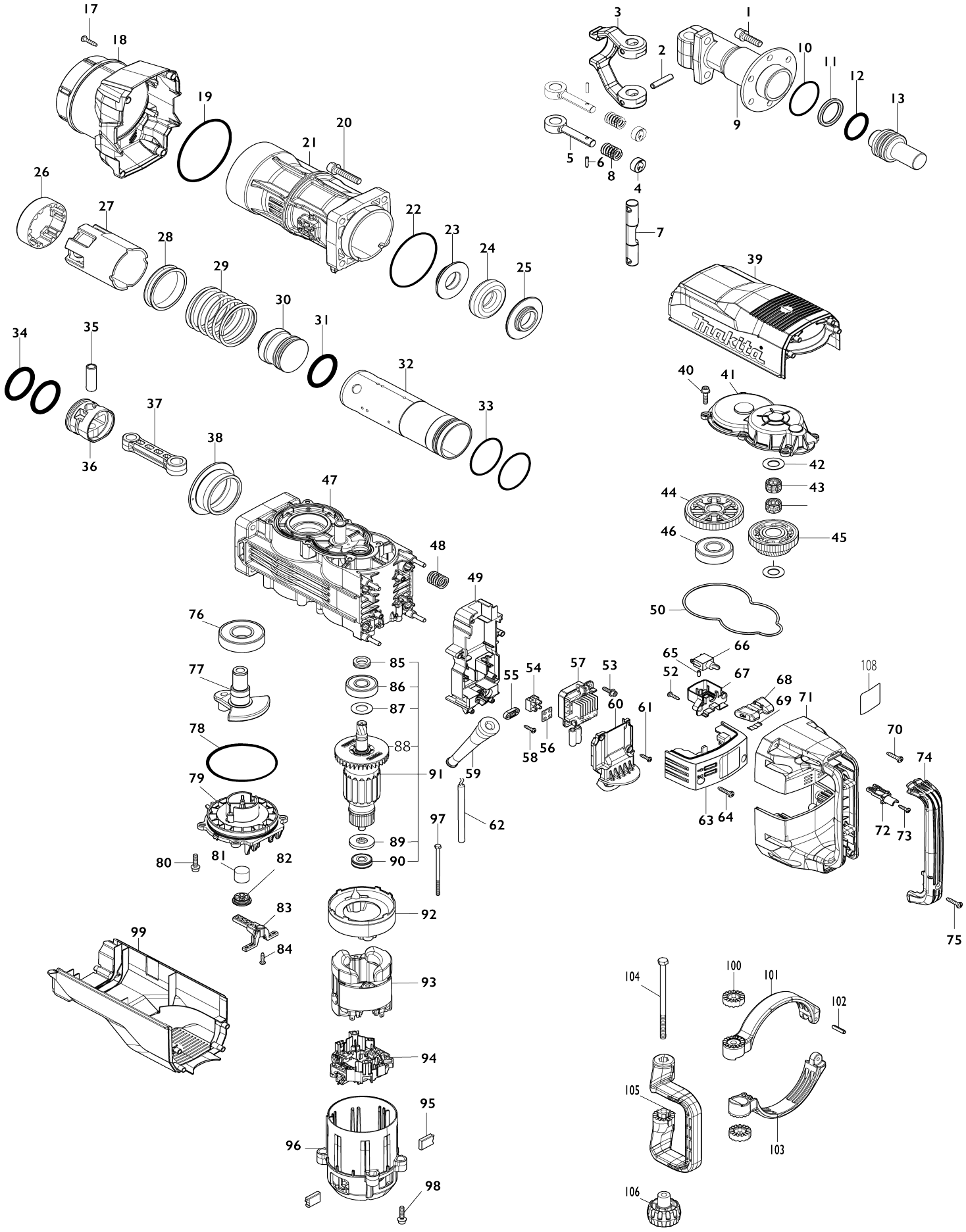

Model No.HM1502 ELECTRIC BREAKER

Item No.	Parts No.	Description	Interchangeability	Q'ty	New/ Old	Note1	Note2
001	265B53-0	Hex. socket head bolt M10X35 W M		6			
002	951272-9	Spring pin 8-40		2			
003	325895-3	Tool retainer		1			
004	322560-5	Retaining ring		2			
005	322477-2	Tool retainer pole		2			
006	256219-1	Pin 4		2			
007	324238-6	Tool retainer shaft		1			
008	233083-7	Compression spring 12		2			
009	313323-0	Tool holder B		1			
010	213670-8	O-ring 58		1			
011	213911-2	X-ring 38		1			
012	213912-0	O-ring 40		1			
013	327669-8	Impact bolt B		1			
017	266041-8	Binding head tapping screw 5X25		4			
018	412874-1	Barrel cover		1			
019	213916-2	O-ring 106		1			
020	265B55-6	Hex. socket head bolt M10X50 W M		4			
021	313324-8	Barrel		1			
022	213806-9	O-ring 90		1			
023	327667-2	Shoulder ring 30B		1			
024	262196-7	Rubber ring 31		1			
025	327666-4	Shoulder ring 30A		1			
026	313321-4	Guide ring		1			
027	412859-7	Slide sleeve		1			
028	327664-8	Sleeve 65		1			
029	232646-6	Compression spring 66		1			
030	327665-6	Striker		1			
031	213913-8	O-ring 48		1			
032	327662-2	Cylinder 59		1			
033	213656-2	O-ring 53		2	*		
033-1	213A99-4	O-RING 53	O	2			
034	213913-8	O-ring 48		2			
035	327663-0	Pipe 15		1			
036	412858-9	Piston		1			
037	412857-1	Connecting rod		1			
038	327661-4	Spacer		1			
039	412875-9	Top cover		1			
040	266923-4	Hex. socket head bolt M6X25 GM		6			
041	413211-2	Gear cover		1			
042	267487-1	Flat washer 17		2			
043	212230-3	Needle cage 1715		2			
044	227832-2	Helical gear 53		1			
045	227833-0	Gear complete 31-45		1			
046	210234-9	Ball bearing 2216LLB		1			
047	140W39-0	Crank housing B complete		1			

048	232645-8	Compression spring 16B		4			
049	412868-6	Controller case		1			
050	422636-9	Seal ring		1			
052	265995-6	Binding head tapping screw 4X18		2			
053	266903-0	Hex. socket head bolt M5X20 WR		2			
054	654741-6	Terminal block		2			
055	687053-2	Strain relief		1			
056	685756-2	Rubber sheet		2			
057	620E04-2	Controller		1			
058	265995-6	Binding head tapping screw 4X18		2			
059	682560-0	Cord guard 10		1			
060	412869-4	Cord cover		1			
061	265995-6	Binding head tapping screw 4X18		4			
062	695123-3	Power supply cord 1.5-2-4.0		1			
063	140W49-7	Controller cover complete		1			
064	266041-8	Binding head tapping screw 5X25		2			
065	263027-3	Rubber pin 4		1			
066	651423-1	Switch ST115A-43		1	*		
066-1	651423-1	Switch ST115A-43	O	1			
067	412878-3	Switch holder		1			
068	451112-6	Slide lever		1			
069	232209-8	Leaf spring		1			
070	266041-8	Binding head tapping screw 5X25		8			
071	140W50-2	Handle complete		1			
C10	263044-3	Rubber pin 6		4			
072	412879-1	Switch support		1			
073	265995-6	Binding head tapping screw 4X18		1			
074	412880-6	Handle cover		1			
075	266041-8	Binding head tapping screw 5X25		1			
076	210233-1	Ball bearing 2818LLU		1			
077	327660-6	Crankshaft		1			
078	213914-6	O-ring 100		1			
079	412864-4	Crank cap B		1			
080	266923-4	Hex. socket head bolt M6X25 GM		4			
081	443127-7	Filter		1			
082	424668-2	Filter cap		1			
083	412867-8	Filter guide		1			
084	265995-6	Binding head tapping screw 4X18		1			
085	332129-7	Screw seal		1			
086	211152-4	Ball bearing 6303LLU		1			
087	267487-1	Flat washer 17		1			
088	240213-3	Fan 80		1			
089	681630-2	Insulation washer		1			
090	210232-3	Ball bearing 6200DDW		1			
091	515544-2	Armature assembly 240V		1			
091		INC. 85-90					

092	412861-0	Baffle plate		1			
093	634749-6	Field		1			
094	632R65-8	Brush holder unit		1			
095	197129-2	Carbon brush set CB-218		1			
096	412860-2	Motor housing		1			
097	265B54-8	Hex. head bolt M5X95 GM		2			
098	266923-4	Hex. socket head bolt M6X25 GM		4			
099	412886-4	Rear cover B		1			
100	417002-3	Side handle cam		2			
101	312A28-5	Side handle base A		1			
102	951166-8	Spring pin 5-24		1			
103	312A29-3	Side handle base B		1			
104	265439-6	Hex. head bolt M8X150		1			
105	412881-4	Side handle		1			
106	252640-2	Thumb nut M8		1			
108	858C38-5	Name plate HM1502		1			
A01	D-17631	BULL POINT 410		1	*		
A01-1	D-17631	BULL POINT 410	<	1			
A02	821839-6	Plastic case		1			
A03	8028G2-7	Plastic case label HM1502		2			
B01	191M25-4	Hammer service kit (for Russia)		1	*		
C10	183D90-3	Oil vessel set (EAC)		4	*		
B01		INC. 11,12,31,34,95			*		
B01-1	191M24-6	Hammer service kit	O	1			
C10	1914C5-7	Grease set	O	4			
B01-1		INC. 11,12,31,34,95					
E01	8027J9-8	Sound label XXdB		1	*		
E01-1	801095-4	Sound label 106dB	<	1			
F01	191M20-4	Dust extractor attachment set		1			
F02	191M21-2	Dust extractor attachment set		1			