Model No.HM1511 ELECTRIC BREAKER

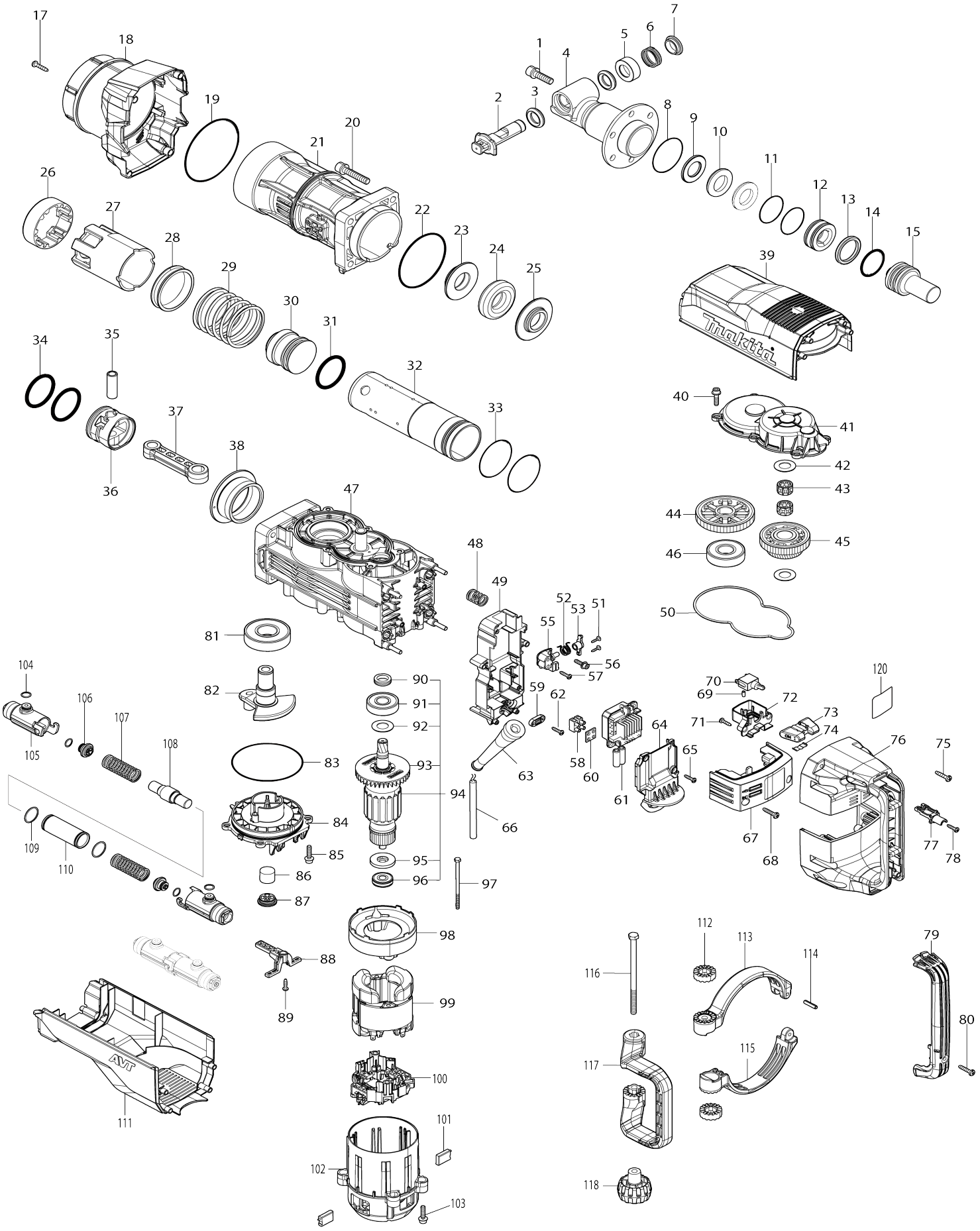

Model No.HM1511 ELECTRIC BREAKER

Item No.	Parts No.	Description	Interchangeability	Q'ty	New/ Old	Note1	Note2
001	265B53-0	H.S HEAD BOLT M10X35 WM		6			
002	327671-1	TOOL RETAINER		1			
003	262197-5	RUBBER RING 20		2			
004	313322-2	TOOL HOLDER A		1			
005	327672-9	SPRING BASE B		1			
006	232641-6	COMPRESSION SPRING 28		1			
007	327670-3	RETAINER SLEEVE		1			
008	213670-8	O RING 58		1			
009	253487-7	FLAT WASHER 26		1			
010	262198-3	URETHANE RING 26		2	*		
010-1	262198-3	URETHANE RING 26	<	2			
011	213569-7	O RING 45		2			
012	327674-5	RING 24		1			
013	213911-2	X-RING 38		1			
014	213912-0	O-RING 40		1			
015	327668-0	IMPACT BOLT A		1			
017	266041-8	TAPPING SCREW 5X25		4			
018	412874-1	BARREL COVER		1			
019	213916-2	O-RING106		1			
020	265B55-6	H.S HEAD BOLT M10X50 WM		4			
021	313324-8	BARREL		1			
022	213806-9	O RING 90		1			
023	327667-2	SHOULDER RING 30 B		1			
024	262196-7	RUBBER RING 31		1			
025	327666-4	SHOULDER RING 30 A		1			
026	313321-4	GUIDE RING		1			
027	412859-7	SLIDE SLEEVE		1			
028	327664-8	SLEEVE 65		1			
029	232646-6	COMPRESSION SPRING 66		1			
030	327665-6	STRIKER		1			
031	213913-8	O-RING 48		1			
032	327662-2	CYLINDER 59		1			
033	213656-2	O RING 53		2			
034	213913-8	O-RING 48		2			
035	327663-0	PIPE 15		1			
036	412858-9	PISTON		1			
037	412857-1	CONNECTING ROD		1			
038	327661-4	SPACER		1			
039	412875-9	TOP COVER		1			
040	266923-4	H.S.HEAD BOLT M6X25 WITH GM		6			
041	413211-2	GEAR COVER		1			
042	267487-1	FLAT WASHER 17		2			
043	212230-3	NEEDLE CAGE 1715		2			
044	227832-2	HELICAL GEAR 53		1			
045	227833-0	GEAR COMPLETE 31-45		1			
046	210234-9	BALL BEARING 2216LLB		1			
047	140W38-2	CRANK HOUSING A COMPLETE		1			

048	232644-0	COMPRESSION SPRING 16 A		4			
049	412868-6	CONTROLLER CASE		1			
050	422636-9	SEAL RING		1			
051	263046-9	TAPPING SCREW 3X14		2			
052	232643-2	TORSION SPRING 13		1			
053	140W48-9	LEVER COMPLETE		1			
055	412871-7	BASE		1			
056	266903-0	HEX.S.HEAD BOLT M5X20 WITH WR		2			
057	265995-6	TAPPING SCREW 4X18		2			
058	654741-6	TERMINAL BLOCK		2			
059	687053-2	STRAIN RELIEF		1			
060	685756-2	RUBBER SHEET		2			
061	620E02-6	CONTROLLER		1			
C10	688165-4	LINE FILTER		2			
062	265995-6	TAPPING SCREW 4X18		2			
063	682560-0	CORD GUARD 10		1			
064	412869-4	CORD COVER		1			
065	265995-6	TAPPING SCREW 4X18		4			
066	695123-3	POWER SUPPLY CORD 1.5-2-4.0		1			
067	140W49-7	CONTROLLER COVER COMPLETE		1			
068	266041-8	TAPPING SCREW 5X25		2			
069	263027-3	RUBBER PIN 4		1			
070	651423-1	SWITCH		1	*		
070-1	651423-1	SWITCH	O	1			
071	265995-6	TAPPING SCREW 4X18		2			
072	412878-3	SWITCH HOLDER		1			
073	451112-6	SLIDE LEVER		1			
074	232209-8	LEAF SPRING		1			
075	266041-8	TAPPING SCREW 5X25		8			
076	140W50-2	HANDLE COMPLETE		1			
C10	263044-3	RUBBER PIN 6		4			
077	412879-1	SWITCH SUPPORT		1			
078	265995-6	TAPPING SCREW 4X18		1			
079	412880-6	HANDLE COVER		1			
080	266041-8	TAPPING SCREW 5X25		1			
081	210233-1	BALL BEARING 2818LLU		1			
082	327660-6	CRANK SHAFT		1			
083	213914-6	O-RING 100		1			
084	412862-8	CRANK CAP A		1			
085	266923-4	H.S.HEAD BOLT M6X25 WITH GM		4			
086	443127-7	FILTER		1			
087	424668-2	FILTER CAP		1			
088	412867-8	FILTER GUIDE		1			
089	265995-6	TAPPING SCREW 4X18		1			
090	332129-7	SEALING SCREW		1			
091	211152-4	BALL BEARING 6303LLU		1			
092	267487-1	FLAT WASHER 17		1			
093	240213-3	FAN 80		1			
094	515544-2	ARMATURE ASSY 240V		1			
D10		INC. 90-93,95,96					
095	681630-2	INSULATION WASHER		1			

096	210232-3	BALL BEARING 6200DDW		1			
097	265B54-8	+ HEX BOLT M5X95 WITH GM		2			
098	412861-0	BUFFLE PLATE		1			
099	634749-6	FIELD 240V		1			
100	632R65-8	BRUSH HOLDER UNIT		1			
101	197129-2	CARBON BRUSH CB-218		1			
102	412860-2	MOTOR HOUSING		1			
103	266923-4	H.S.HEAD BOLT M6X25 WITH GM		4			
104	213058-2	O RING 10		8			
105	412865-2	PIPE HOLDER		4			
106	412866-0	SPRING GUIDE		4			
107	232642-4	COMPRESSION SPRING 18		4			
108	327679-5	COUNTER WEIGHT		2			
109	213915-4	O-RING 25		4			
110	327680-0	PIPE 22		2			
111	412876-7	REAR COVER A		1			
112	417002-3	SIDE HANDLE CAM		2			
113	312A28-5	SIDE HANDLE BASE A		1			
114	951166-8	SPRING PIN 5-24		1			
115	312A29-3	SIDE HANDLE BASE B		1			
116	265439-6	HEX. BOLT M8X150		1			
117	412881-4	SIDE HANDLE		1			
118	252640-2	WING NUT M8		1			
120	858C53-9	HM1511 NAME PLATE		1			
A01	D-15285	BULL POINT 400		1	*		
A01-1	D-15285	BULL POINT 400	<	1			
A02	821836-2	PLASTIC CARRYING CASE		1	*		
A02-1	821839-6	PLASTIC CARRYING CASE	O	1			
A03	8028F9-6	HM1511 PLASTIC CASE LABEL		2			
B01	191M24-6	HAMMER SERVICE KIT		1			
C10	181490-7	HAMMER GREASE 30G		4	*		
C11	1914C5-7	GREASE SET	O	4			
D10		INC. 13,14,31,34,101					
E01	8027J9-8	SOUND XXDB LABEL		1	*		
E01-1	801095-4	SOUND 106DB LABEL	<	1			
F01	191M20-4	DUST EXTRACTOR ATTACHMENT SET		1			
F02	191M21-2	DUST EXTRACTOR ATTACHMENT SET		1			