Model No.HM0871C Demolition Hammer

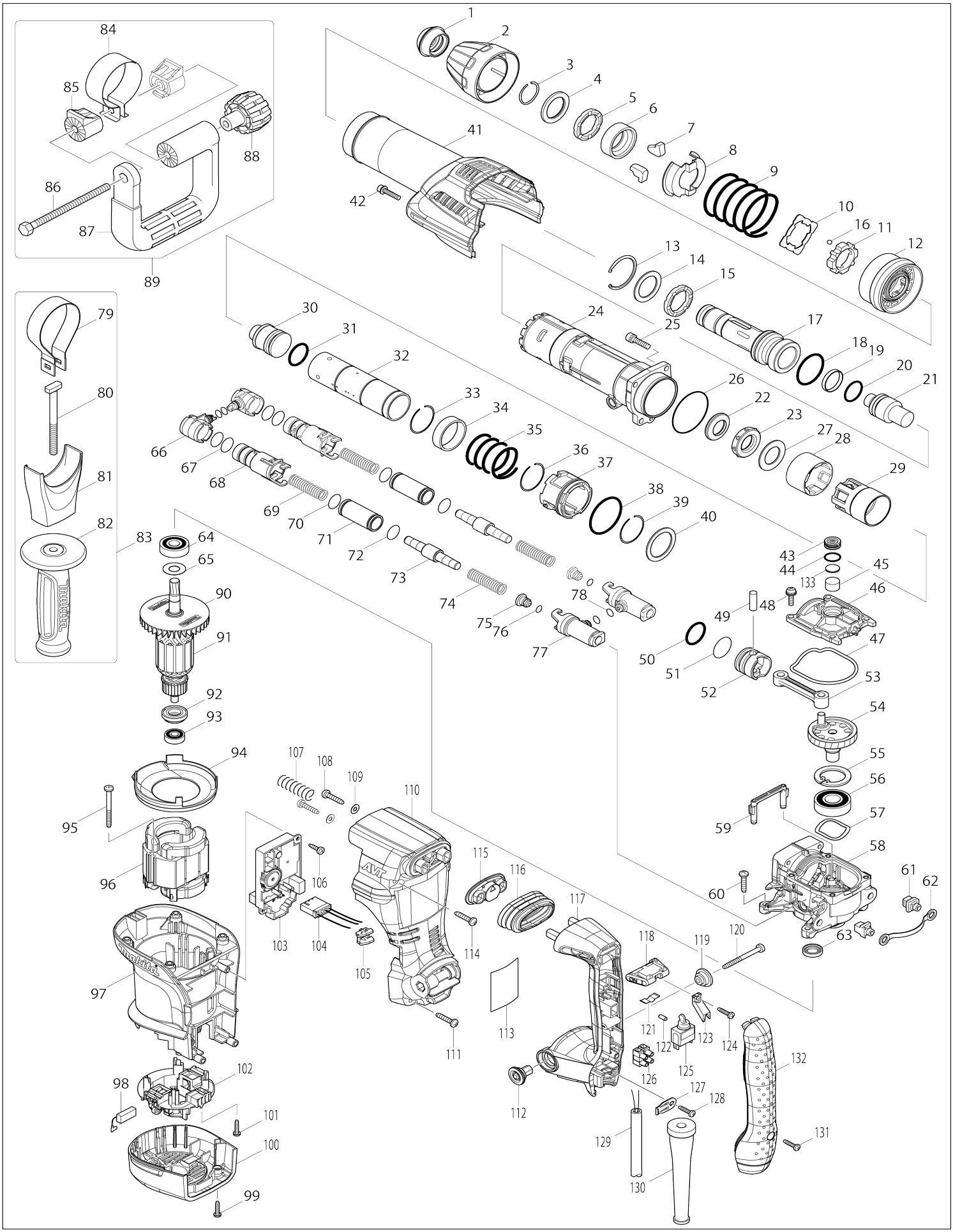

Model No.HM0871C Demolition Hammer

Item No.	Parts No.	Description	Interchangeability	Q'ty	New/ Old	Note1	Note2
001	286287-0	Tool holder cap		1			
002	451432-8	Chuck cover		1			
003	231984-3	Ring spring 25		1			
004	267272-2	Flat washer 28		1			
005	424261-2	Rubber ring 28		1			
006	331659-5	Chuck ring		1			
007	310108-5	Tool retainer		2			
008	345360-6	Spring guide		1	*		
008-1	346677-0	Spring guide	<	1			
009	233387-7	Compression spring 52		1			
010	346141-1	Plate		1			
011	310145-9	Lock ring		1			
012	451433-6	Change ring		1			
013	257960-9	Retaining ring (INT) round R-42		1			
014	267273-0	Flat washer 29		1			
015	424261-2	Rubber ring 28		1			
016	216002-8	Steel ball 4.8		4			
017	324387-9	Tool holder		1			
018	213527-3	O-ring 38		1			
019	213431-6	Fluoro carbon resin ring 28		1			
020	213394-6	O-ring 23		1			
021	324389-5	Impact bolt		1			
022	325732-1	Ring 20		1			
023	424245-0	Rubber ring 20		1			
024	318511-4	Barrel		1			
025	922341-3	Hex. socket head bolt M6X25 W		4			
026	213656-2	O-ring 53		1			
027	267407-5	Flat washer 23		1			
028	451639-6	Guide ring		1			
029	450098-1	Slide sleeve		1			
030	324388-7	Striker		1			
031	213958-6	O-ring 24		1			
032	331658-7	Cylinder 32		1			
033	233927-1	Ring spring 34		1			
034	331660-0	Ring 36		1			
035	233386-9	Compression spring 37		1			
036	233927-1	Ring spring 34		1			
037	318510-6	Cylinder guide		1			
038	213611-4	O-ring 46		1			
039	233927-1	Ring spring 34		1			
040	267079-6	Flat washer 34		1			
041	451443-3	Housing cover		1			
042	922243-3	Hex. socket head bolt M5X25 WR		1	*		
042-1	922243-3	Hex. socket head bolt M5X25 WR	O	1			
043	419988-7	Filter cap		1			
044	213218-6	O-ring 16		1	*		
044-1	213A05-9	O-ring 16	O	1			

045	443129-3	Filter		1			
046	451434-4	Crank cap		1			
047	424244-2	Seal ring		1			
048	911233-1	Pan head screw M5X20 WR		4			
049	268104-6	Pin 8		1			
050	213958-6	O-ring 24		1			
051	213432-4	O-ring 26		1			
052	418349-8	Piston		1			
053	418350-3	Connecting rod		1			
054	325734-7	Crankshaft 17.5		1			
055	962157-4	Retaining ring (INT) R-40		1			
056	211281-3	Ball bearing 6203LLU		1	*		
056-1	211490-4	Ball bearing 6203LLU	O	1			
057	267825-7	Wave washer 30		1			
058	140204-3	Crank housing complete		1			
059	451429-7	Air pipe		1			
060	266041-8	Binding head tapping screw 5X25		4			
061	419008-7	Fix guide		2			
062	423400-1	Cushion plate		1			
063	213133-4	Oil seal 12		1	*		
063-1	213678-2	Oil seal 12	O	1			
064	211106-1	Ball bearing 6201LLB		1			
065	253759-0	Flat washer 12		1			
066	451430-2	Pipe holder support		2	*		
066-1	455791-2	Pipe holder support	<	2			
067	213275-4	O-ring 18		4			
068	451436-0	Pipe holder B		2			
069	234134-9	Compression spring 12		2			
070	213275-4	O-ring 18		2			
071	324572-4	Pipe 16		2			
072	213275-4	O-ring 18		2			
073	325733-9	Counter weight		2			
074	234134-9	Compression spring 12		2			
075	419011-8	Spring guide		2			
076	213030-4	O-ring 8		2			
077	451435-2	Pipe holder A		2			
078	213030-4	O-ring 8		4			
084	152620-7	Side handle base 60 complete		1			
085	417002-3	Side handle cam		2			
086	265439-6	Hex. head bolt M8X150		1			
087	417003-1	Side handle		1			
088	252640-2	Thumb nut M8		1			
089	134909-5	Side handle 60 assembly		1			
089		INC. 84-88					
090	240119-5	Fan 76		1			
091	513793-5	Armature assembly 220-240V		1			
091		INC. 90,92,93					
092	681650-6	Insulation washer		1			
093	210005-4	Ball bearing 608DDW		1			
094	451438-6	Baffle plate		1			
095	266095-5	Binding head tapping screw 5X5		2			

		5					
096	625764-1	Field 240V		1			
097	451423-9	Motor housing		1			
098	194160-9	Carbon brush set CB-350		1	*		
098-1	195004-6	Carbon brush set CB-350	O	1	*		
098-2	194160-9	Carbon brush set CB-350	O	1			
099	265995-6	Binding head tapping screw 4X18		2			
100	451442-5	Rear cover		1			
101	265995-6	Binding head tapping screw 4X18		4			
102	638674-3	Brush holder unit		1			
103	631932-6	Controller		1			
104	638675-1	Lead unit		1			
105	451428-9	Lens		1			
106	266192-7	Binding head tapping screw 4X14		2	*		
106-1	266901-4	Binding head tapping screw 4X14	<	2	*		
106-2	265E80-5	Tapping screw 4X14	O	2			
107	233434-4	Compression spring 11		1			
108	266041-8	Binding head tapping screw 5X25		2			
109	267066-5	Flat washer 5		2			
110	451447-5	Handle base		1			
111	266041-8	Binding head tapping screw 5X25		2			
112	451431-0	Handle retainer		1			
113	867384-7	Name plate HM0871C		1	*		
113-1	814H67-8	Name plate HM0871C	O	1			
114	266041-8	Binding head tapping screw 5X25		2			
115	451437-8	Dust cover support		1			
116	424247-6	Dust cover		1			
117	140205-1	Handle complete		1			
118	451439-4	Slide lever		1			
119	450352-3	Shoulder sleeve 6		1			
120	266095-5	Binding head tapping screw 5X55		1			
121	232209-8	Leaf spring		1			
122	263027-3	Rubber pin 4		1			
123	451427-1	Switch lever		1			
124	265995-6	Binding head tapping screw 4X18		1			
125	651418-4	Switch ST115A-40		1	*		
125-1	651418-4	Switch ST115A-40	O	1			
126	654531-7	Terminal block		1	*		
126-1	654741-6	Terminal block	O	1			
127	687169-3	Strain relief		1			
128	265995-6	Binding head tapping screw 4X18		1			
129	695123-3	Power supply cord 1.5-2-4.0		1			
130	682560-0	Cord guard 10		1			
131	265995-6	Binding head tapping screw 4X18		1			

132	451445-9	Handle cover		1			
133	423411-6	Rubber plate		1			
A01	194683-7	Grease vessel set		1	*		
A01-1	198993-4	Grease vessel set	<	1			
A02	443122-7	Cloth		1	*		
A03	824904-0	Plastic case		1	*		
C10	162271-8	Latch		2	*		
C20	450990-1	Handle		1	*		
C30	325809-2	Shaft		1	*		
A03-1	824905-8	Plastic case	O	1			
C10	162271-8	Latch		2			
C20	450990-1	Handle		1			
C30	325809-2	Shaft		1			
A04	809666-1	Plastic case label HM0871C		2	*		
A04-1	801G01-1	Plastic case label HM0871C	<	2	*		
A04-2	8064G7-5	Plastic case label HM0871C	O	2	*		
B01	195113-1	Hammer service kit		1			
C10	181490-7	Oil vessel set 30CC		1	*		
C11	1914C5-7	Grease set	O	1			
B01		INC. 1,3,7,19,20,31,50,51,98					
E03	801G22-3	Clear label		1	*		
E04	819V88-9	Sound 95dB label		1	*		
E04-1	8026N9-0	Sound label	<	1	*		
E04-2	806F30-3	Sound 102dB label	<	1			
F01	194683-7	Grease vessel set		1			
F04-1	199143-4	Dust extractor attachment set	<	1			
F05-1	199143-4	Dust extractor attachment set	<	1			
F07-1	199144-2	Dust extractor attachment set	<	1			
C10	417765-1	Front cuff 22		1			
C20	417766-9	Front cuff 38		1			
C30	415021-3	Hose joint		1	*		
C31	415021-3	Hose joint	O	1			
F08-1	199144-2	Dust extractor attachment set	<	1			
C10	417765-1	Front cuff 22		1			
C20	417766-9	Front cuff 38		1			
C30	415021-3	Hose joint		1	*		
C31	415021-3	Hose joint	O	1			
F11	198993-4	Grease vessel set		1			
F27	1914C6-5	Grease set		1			