Model No.GP001G Cordless Grease Gun

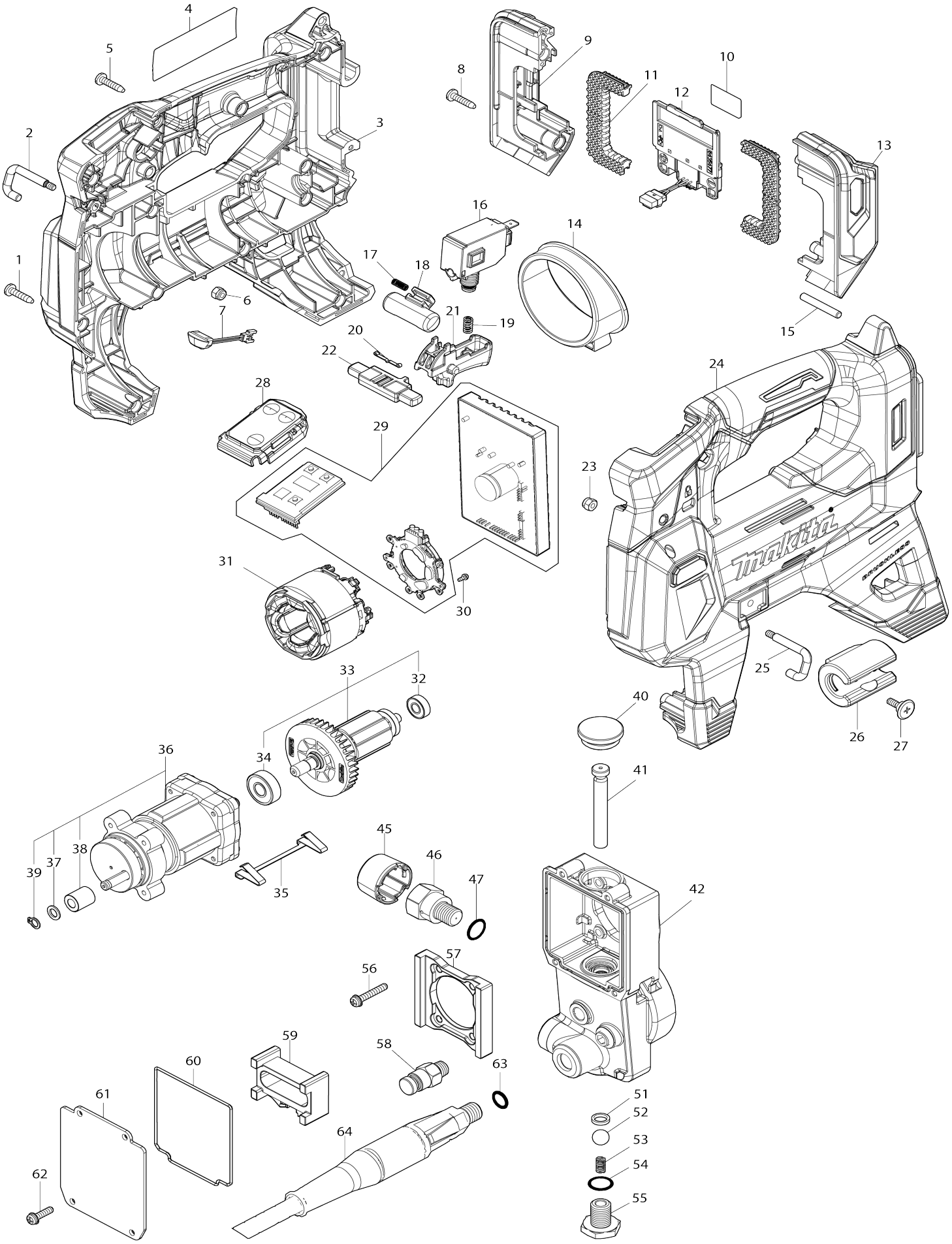

Model No.GP001G Cordless Grease Gun

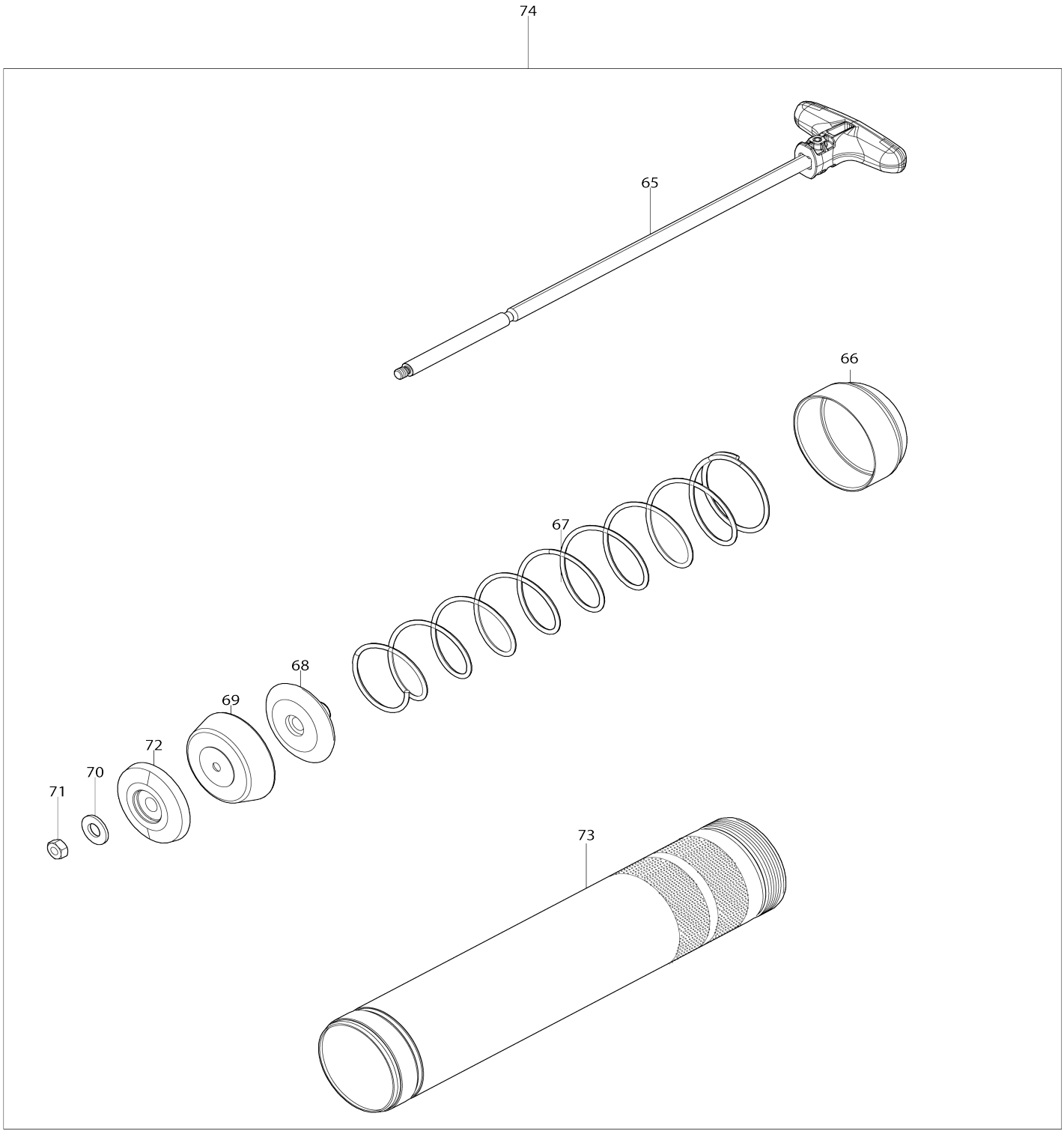

Model No.GP001G Cordless Grease Gun

Item No.	Parts No.	Description	Interchangeability	Q'ty	New/ Old	Note1	Note2
001	266326-2	Binding head tapping screw 4X18		13			
002	327E61-8	Shoulder belt holder		1			
003	1831G4-3	HOUSING SET		1			
C10	252126-6	Hex. lock nut M4-7		2			
003		INC. 24					
004	8149H0-2	GP001G NAME PLATE		1			
005	266326-2	Binding head tapping screw 4X18		1			
006	252126-6	Hex. lock nut M4-7		1			
007	620E27-0	LED circuit		1			
008	266326-2	Binding head tapping screw 4X18		2			
009	1831F5-4	BATTERY HOUSING SET		1			
C10	263005-3	Rubber pin 6		2			
009		INC. 13					
010	8149H2-8	GP001G SERIAL NO. LABEL		1			
011	422543-6	Cushion rubber		2			
012	632P65-6	Terminal unit		1			
013	1831F5-4	BATTERY HOUSING SET		1			
C10	263005-3	Rubber pin 6		2			
013		INC. 9					
014	459621-9	Barrel holder		1			
015	268306-4	Pin 5		1			
016	651391-8	Switch C3JW-6BM-PN		1			
017	231433-0	Compression spring 4		1			
018	419705-5	Lock on button		1			
019	233306-3	Compression spring 4		1			
020	232201-4	Leaf spring		1			
021	459623-5	Switch lever		1			
022	459624-3	Lock off button		1			
023	252126-6	Hex. lock nut M4-7		1			
024	1831G4-3	HOUSING SET		1			
C10	252126-6	Hex. lock nut M4-7		2			
024		INC. 3					
025	327E61-8	Shoulder belt holder		1			
026	422C03-6	Hose holder		1			
027	265B56-4	Flat head shoulder screw M4X14		1			
028	1410S6-3	Switch case complete		1			
029	620R17-1	Controller		1			
030	652119-7	Pan head screw M2X6		6			
031	629C99-0	Stator		1			
032	210026-6	Ball bearing 696ZZ		1			
033	519887-4	ROTOR ASS'Y		1			
033		INC. 32,34					
034	210005-4	Ball bearing 608DDW		1			
035	654939-5	Earth plate		1			
036	137233-5	GEAR ASSEMBLY		1			

036		INC. 37-39					
037	253477-0	Flat washer 6		1			
038	214079-7	Plain bearing 6		1			
039	961002-0	Retaining ring (EXT) S-6		1			
040	286048-8	Cap 27		1			
041	256A85-2	Flat fillister head pin 8		1			
042	137384-4	PUMP HOUSING A ASS'Y		1			
C10	422476-5	Rubber packing A		1			
045	459622-7	Valve cover		1			
046	140M83-7	Relief valve complete		1			
047	213A33-4	O-ring 12.5		1			
051	257494-2	Ring 8		1			
052	216003-6	Steel ball 10		1			
053	232557-5	Compression spring 4		1			
054	213A33-4	O-ring 12.5		1			
055	265A56-8	Hex. head bolt M12X16		1			
056	911148-2	Pan head screw M4X25 WR		4			
057	313598-1	Slider guide		1			
058	162B92-0	Drain valve		1			
059	313597-3	Slider		1			
060	422C04-4	Seal ring		1			
061	347D22-6	Pump cover		1			
062	911128-8	Pan head screw M4X16 WR		4			
063	213054-0	O-ring 9		1			
064	1916S5-1	Flexible hose 1200 set		1			
065	140T28-7	Shaft complete		1			
066	347543-4	Cap A		1			
067	232775-5	Conical spring		1			
068	413459-6	Plate A		1			
069	422685-6	Rubber seal A		1			
070	941201-0	Flat washer 8		1			
071	931302-2	Hex. nut M6		1			
072	413K05-1	Front plate A		1			
073	327379-7	Barrel A		1			
074	122D16-0	Barrel assembly A		1			
074		INC. 65-73					
A01	166094-6	Shoulder belt		1	*		
A01-1	162E74-0	Shoulder belt	O	1			
A02B	821927-9	PLASTIC CASE		1			
C10	162271-8	Latch		2			
A03B	412393-7	Battery cover		1			
A04B	***DC40RA	DC40RA FAST CHARGER		1			
A04B		COMPO-PARTS					
A05B	191B36-3	Battery BL4025 set		2			
F01	1911M9-1	Extension pipe set		1			
F02	1914G9-7	Loader fitting set		1			
F03	1915E6-5	Joint set		1			
F04	1915L9-8	Adapter set (1 pc)		1			
F05	1915M0-3	Adapter set (3 pcs)		1			
F06	1915N4-2	Lock on adapter set		1			
F07	1916S5-1	Flexible hose 1200 set		1			
F08	1916S7-7	Flexible hose 600 set		1			

F09	1916U8-9	Angle adapter set		1			
F10	1919A5-3	JOINT 400 SET		1			

Please state Parts No. when your order.

Print Date 09/14/2026