Model No.GD0810C DIE GRINDER

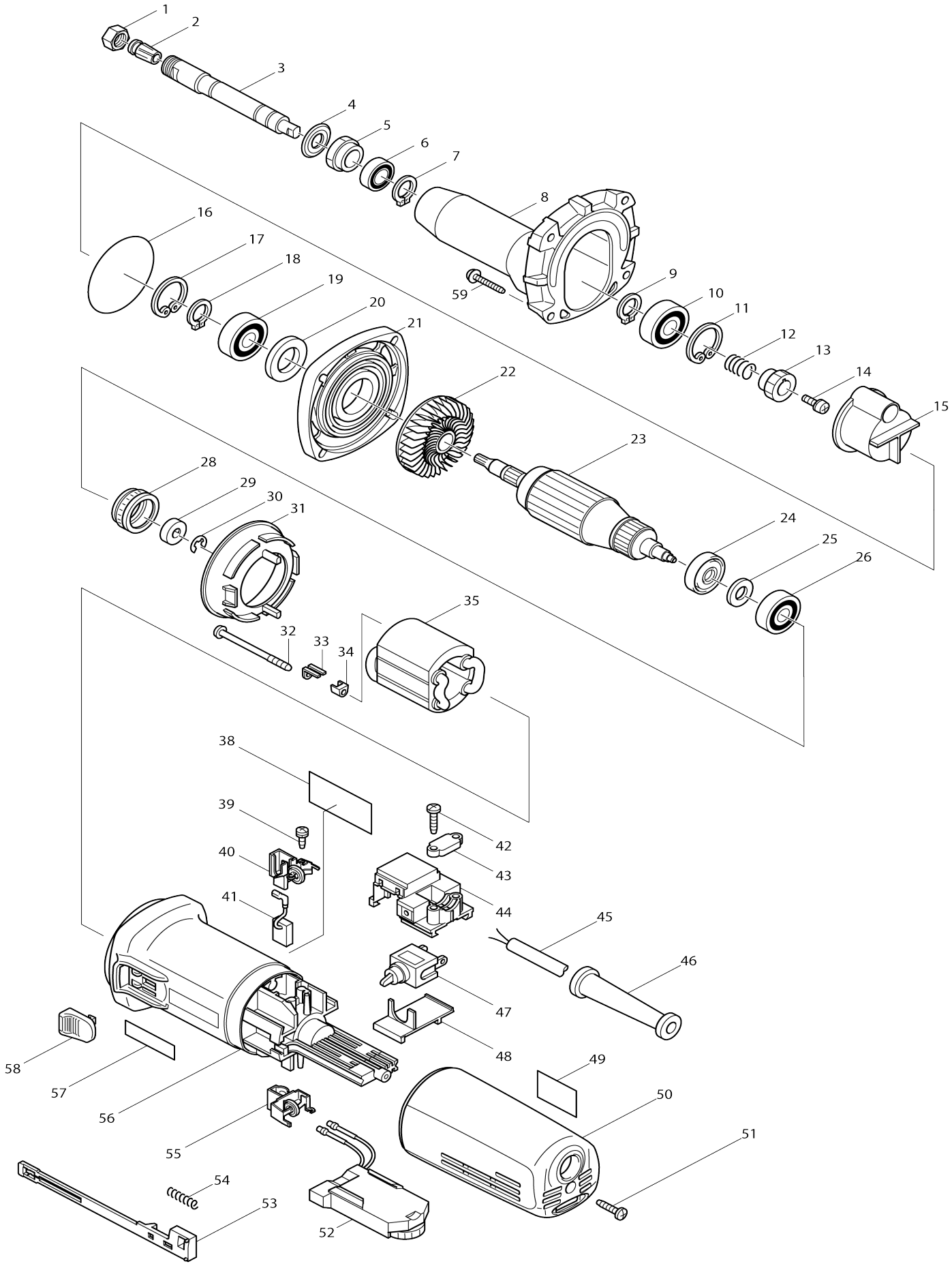

# Model No.GD0810C DIE GRINDER

| Item No. | Parts No. | Description | Interchangeability | Q'ty | New/ Old | Note1 | Note2 |
|---|---|---|---|---|---|---|---|
| 001 | 763645-2 | Collet nut | | 1 | | | |
| 002 | 193012-1 | Collet cone 6 set | | 1 | | | |
| C10 | 763646-0 | Collet cone 6 | | 1 | | | |
| 002 | | INC. 1 | | | | | |
| 003 | 324042-3 | Spindle | | 1 | | | |
| 004 | 213209-7 | Oil seal 16 | | 1 | | | |
| 005 | 285700-5 | Bearing retainer | | 1 | | | |
| 006 | 211141-9 | Ball bearing 6901LLB | | 1 | | | |
| 007 | 961052-5 | Retaining ring (EXT) S-12 | | 1 | | | |
| 008 | 317369-8 | Barrel | | 1 | | | |
| 009 | 961052-5 | Retaining ring (EXT) S-12 | | 1 | | | |
| 010 | 211142-7 | Ball bearing 6001LLB | | 1 | * | | |
| 010-1 | 211148-5 | Ball bearing 6001ZZ | < | 1 | | | |
| 011 | 962106-1 | Retaining ring (INT) R-28 | | 1 | | | |
| 012 | 233901-9 | Lock spring 12 | | 1 | | | |
| 013 | 226531-3 | Helical gear 25 | | 1 | | | |
| 014 | 265082-1 | Pan head screw M4X8 | | 1 | | | |
| 015 | 417363-1 | Gear cover | | 1 | | | |
| 016 | 213611-4 | O-ring 46 | | 1 | * | | |
| 016-1 | 213A97-8 | O-RING 46 | O | 1 | | | |
| 017 | 962106-1 | Retaining ring (INT) R-28 | | 1 | | | |
| 018 | 961052-5 | Retaining ring (EXT) S-12 | | 1 | | | |
| 019 | 211142-7 | Ball bearing 6001LLB | | 1 | * | | |
| 019-1 | 211148-5 | Ball bearing 6001ZZ | < | 1 | | | |
| 020 | 253084-9 | Flat washer 12 | | 1 | | | |
| 021 | 317367-2 | Bearing box | | 1 | | | |
| 022 | 240036-9 | Fan 57 | | 1 | | | |
| 023 | 515199-3 | Armature assembly 230-240V | | 1 | * | | |
| 023 | | INC. 22,24-26 | | | * | | |
| 023-1 | 515214-3 | Armature assembly 230-240V | S | 1 | | | |
| 023-1 | | INC. 22,24-26 | | | | | |
| 024 | 681656-4 | Insulation washer | | 1 | | | |
| 025 | 253823-7 | Flat washer 7 | | 1 | | | |
| 026 | 210023-2 | Ball bearing 627DDW | | 1 | | | |
| 028 | 421770-2 | Labyrinth rubber ring 22 | | 1 | | | |
| 029 | 688117-5 | Magnet sleeve | | 1 | | | |
| 030 | 961011-9 | Stop ring (EXT) E-4 | | 1 | * | | |
| 030-1 | 259039-2 | Self lock 6 | S | 1 | | | |
| 031 | 413076-2 | Baffle plate | | 1 | | | |
| 032 | 266259-1 | Binding head tapping screw 4X60 | | 2 | | | |
| 033 | 344871-8 | Retainer | | 2 | | | |
| 034 | 417237-6 | Insulation cover | | 2 | * | | |
| 035 | 626529-4 | Field 230-240V | | 1 | * | | |
| 035-1 | 621B79-6 | Field | S | 1 | | | |
| 038 | 852418-9 | Name plate GD0810C | | 1 | * | | |
| 038-1 | 814S06-4 | Name plate GD0810C | < | 1 | | | |
| 039 | 266256-7 | Binding head tapping screw 3X1 | | 4 | | | |

| | | | | | | | |
|---|---|---|---|---|---|---|---|
| | | 0 | | | | | |
| 040 | 643762-3 | Brush holder | | 1 | * | | |
| 040-1 | 643760-7 | Brush holder | O | 1 | | | |
| 041 | 191974-7 | Carbon brush set CB-310 | | 1 | * | | |
| 041-1 | 191978-9 | Carbon brush set CB-318 | X | 1 | | | |
| 042 | 265995-6 | Binding head tapping screw 4X18 | | 2 | | | |
| 043A_ | 687052-4 | Strain relief | | 1 | | | |
| 044A_ | 632945-0 | Switch block | | 1 | | | |
| 045E_ | 665394-6 | Power supply cord 1.0-2-2.5 | | 1 | | | |
| 046A_ | 682559-5 | Cord guard 8 | | 1 | | | |
| 047 | 651418-4 | Switch ST115A-40 | | 1 | * | | |
| 047-1 | 651418-4 | Switch ST115A-40 | O | 1 | | | |
| 048 | 687113-0 | Cover | | 1 | | | |
| 049 | 816803-0 | Operation label | | 1 | * | | |
| 049-1 | 804Y16-5 | Operation label | < | 1 | | | |
| 050 | 417185-9 | Rear cover | | 1 | | | |
| 051 | 265995-6 | Binding head tapping screw 4X18 | | 1 | | | |
| 052A_ | 631391-4 | Controller | | 1 | | | |
| 053 | 417187-5 | Switch lever | | 1 | | | |
| 054 | 233071-4 | Compression spring 4 | | 1 | | | |
| 055 | 643761-5 | Brush holder | | 1 | * | | |
| 055-1 | 643974-8 | Brush holder | O | 1 | | | |
| 056 | 417184-1 | Motor housing | | 1 | * | | |
| 056-1 | 183406-8 | Motor housing set | S | 1 | * | | |
| 056-1 | | INC. 57 | | | * | | |
| 056-2 | 417812-8 | Motor housing | < | 1 | | | |
| 057 | 819720-3 | Makita logo label | | 1 | * | | |
| 058 | 417188-3 | Switch knob | | 1 | * | | |
| 058-1 | 417813-6 | Switch knob | < | 1 | | | |
| 059 | 265999-8 | Binding head tapping screw 4X25 | | 4 | | | |
| A01 | 781203-2 | Wrench 13 | | 1 | | | |
| A02 | 781206-6 | Wrench 19 | | 1 | | | |
| A03 | 192985-5 | Side handle set | | 1 | | | |
| C10 | 152521-9 | Grip 36 complete | | 1 | * | | |
| C11 | 153503-4 | Grip 36 complete | O | 1 | | | |
| C20 | 415485-1 | Grip base | | 1 | | | |
| C30 | 921919-9 | Hex. head bolt M8X110 | | 1 | | | |
| F04 | 192988-9 | Collet cone 8 set | | 1 | | | |
| C10 | 763649-4 | Collet cone 8 | | 1 | | | |
| F05 | 193011-3 | Collet cone 3 set | | 1 | | | |
| C10 | 763647-8 | Collet cone 3 | | 1 | | | |