Model No.GD0800C Die Grinder

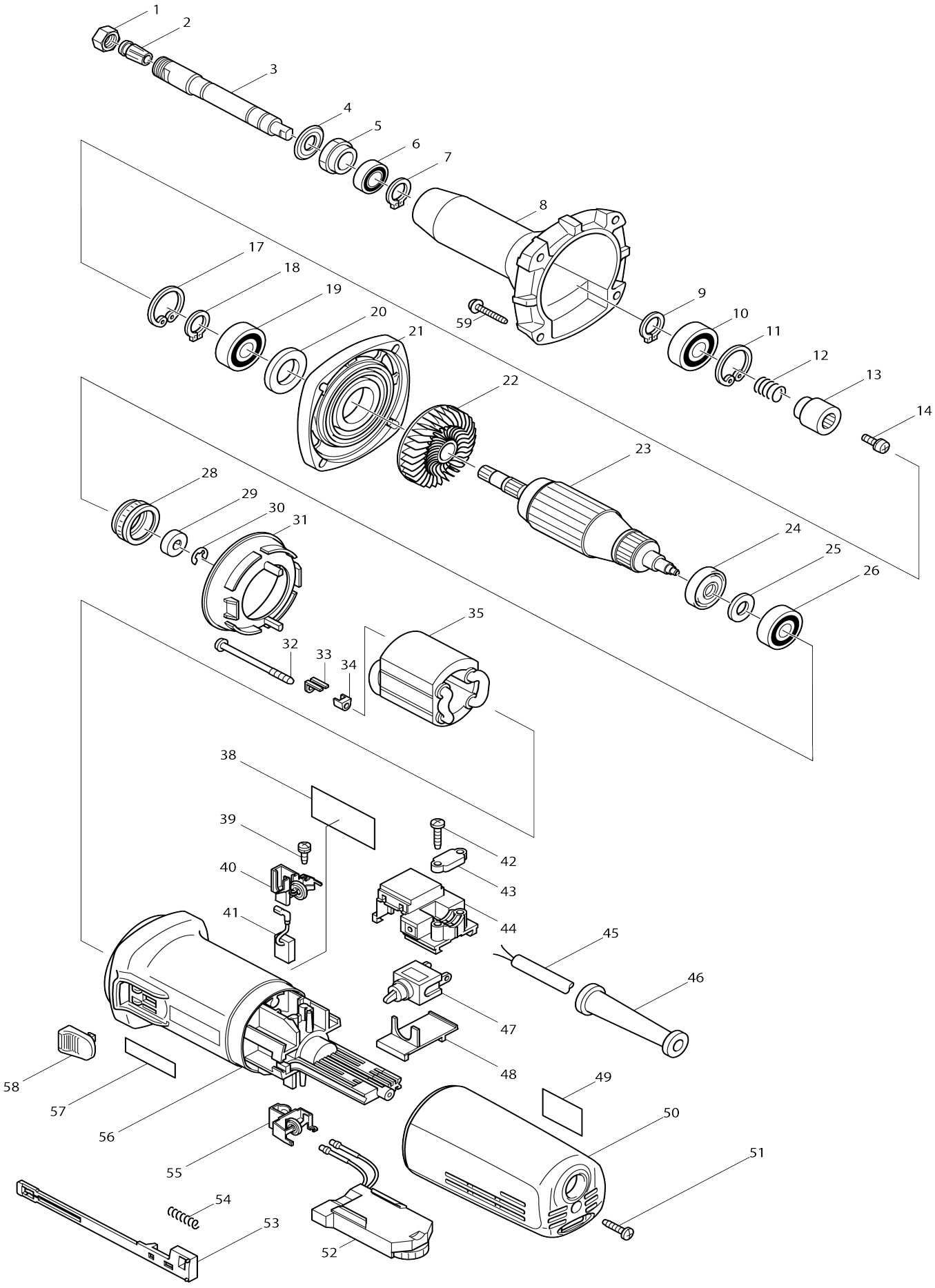

Model No.GD0800C Die Grinder

Item No.	Parts No.	Description	Interchangeability	Q'ty	New/ Old	Note1	Note2
001	763645-2	Collet nut		1			
002	193012-1	Collet cone 6 set		1			
C10	763646-0	Collet cone 6		1			
002		INC. 1					
003	324042-3	Spindle		1			
004	213209-7	Oil seal 16		1			
005	285700-5	Bearing retainer		1			
006	211141-9	Ball bearing 6901LLB		1			
007	961052-5	Retaining ring (EXT) S-12		1			
008	317368-0	Barrel		1			
009	961052-5	Retaining ring (EXT) S-12		1			
010	211142-7	Ball bearing 6001LLB		1	*		
010-1	211148-5	Ball bearing 6001ZZ	<	1			
011	962106-1	Retaining ring (INT) R-28		1			
012	233901-9	Lock spring 12		1			
013	323989-8	Coupling		1			
014	265082-1	Pan head screw M4X8		1			
017	962106-1	Retaining ring (INT) R-28		1			
018	961052-5	Retaining ring (EXT) S-12		1			
019	211142-7	Ball bearing 6001LLB		1	*		
019-1	211148-5	Ball bearing 6001ZZ	<	1			
020	253084-9	Flat washer 12		1			
021	317367-2	Bearing box		1			
022	240036-9	Fan 57		1			
023B_	515194-3	Armature assembly 230-240V		1	*		
023B_		INC. 22,24-26			*		
023B1	515219-3	Armature assembly 230-240V	S	1			
023B1		INC. 22,24-26					
024	681656-4	Insulation washer		1			
025	253823-7	Flat washer 7		1			
026	210023-2	Ball bearing 627DDW		1			
028	421770-2	Labyrinth rubber ring 22		1			
029	688117-5	Magnet sleeve		1			
030	961011-9	Stop ring (EXT) E-4		1	*		
030-1	259039-2	Self lock 6	S	1			
031	413076-2	Baffle plate		1			
032	266259-1	Binding head tapping screw 4X60		2			
033	344871-8	Retainer		2			
034	417237-6	Insulation cover		2	*		
035B_	626524-4	Field 230-240V		1	*		
035B1	621B39-8	Field	S	1			
038	852410-5	Name plate GD0800C		1	*		
038-1	814S07-2	Name plate GD0800C	<	1			
039	266256-7	Binding head tapping screw 3X10		4			
040	643762-3	Brush holder		1	*		
040-1	643760-7	Brush holder	O	1			

041	191974-7	Carbon brush set CB-310		1	*		
041-1	191978-9	Carbon brush set CB-318	X	1			
042	265995-6	Binding head tapping screw 4X18		2			
043A_	687052-4	Strain relief		1			
044A_	632945-0	Switch block		1			
045E_	665394-6	Power supply cord 1.0-2-2.5		1			
046A_	682559-5	Cord guard 8		1			
047	651418-4	Switch ST115A-40		1	*		
047-1	651418-4	Switch ST115A-40	O	1			
048	687113-0	Cover		1			
049	816800-6	Operation label		1	*		
049-1	810E29-6	Operation label	<	1			
050	417185-9	Rear cover		1			
051	265995-6	Binding head tapping screw 4X18		1			
052A_	631391-4	Controller		1			
053	417187-5	Switch lever		1			
054	233071-4	Compression spring 4		1			
055	643761-5	Brush holder		1	*		
055-1	643974-8	Brush holder	O	1			
056	417184-1	Motor housing		1	*		
056-1	183406-8	Motor housing set	S	1	*		
056-1		INC. 57			*		
056-2	417812-8	Motor housing	<	1			
057	819720-3	Makita logo label		1	*		
058	417188-3	Switch knob		1	*		
058-1	417813-6	Switch knob	<	1			
059	265999-8	Binding head tapping screw 4X25		4			
060	800092-7	Indication label		1			
A01	781203-2	Wrench 13		1			
A02	781206-6	Wrench 19		1			
A03	192985-5	Side handle set		1			
C10	152521-9	Grip 36 complete		1	*		
C11	153503-4	Grip 36 complete	O	1			
C20	415485-1	Grip base		1			
C30	921919-9	Hex. head bolt M8X110		1			
F04	192988-9	Collet cone 8 set		1			
C10	763649-4	Collet cone 8		1			
F05	193011-3	Collet cone 3 set		1			
C10	763647-8	Collet cone 3		1			
F07	193141-0	Vise holder set		1			