Model No.GD0603 DIE GRINDER

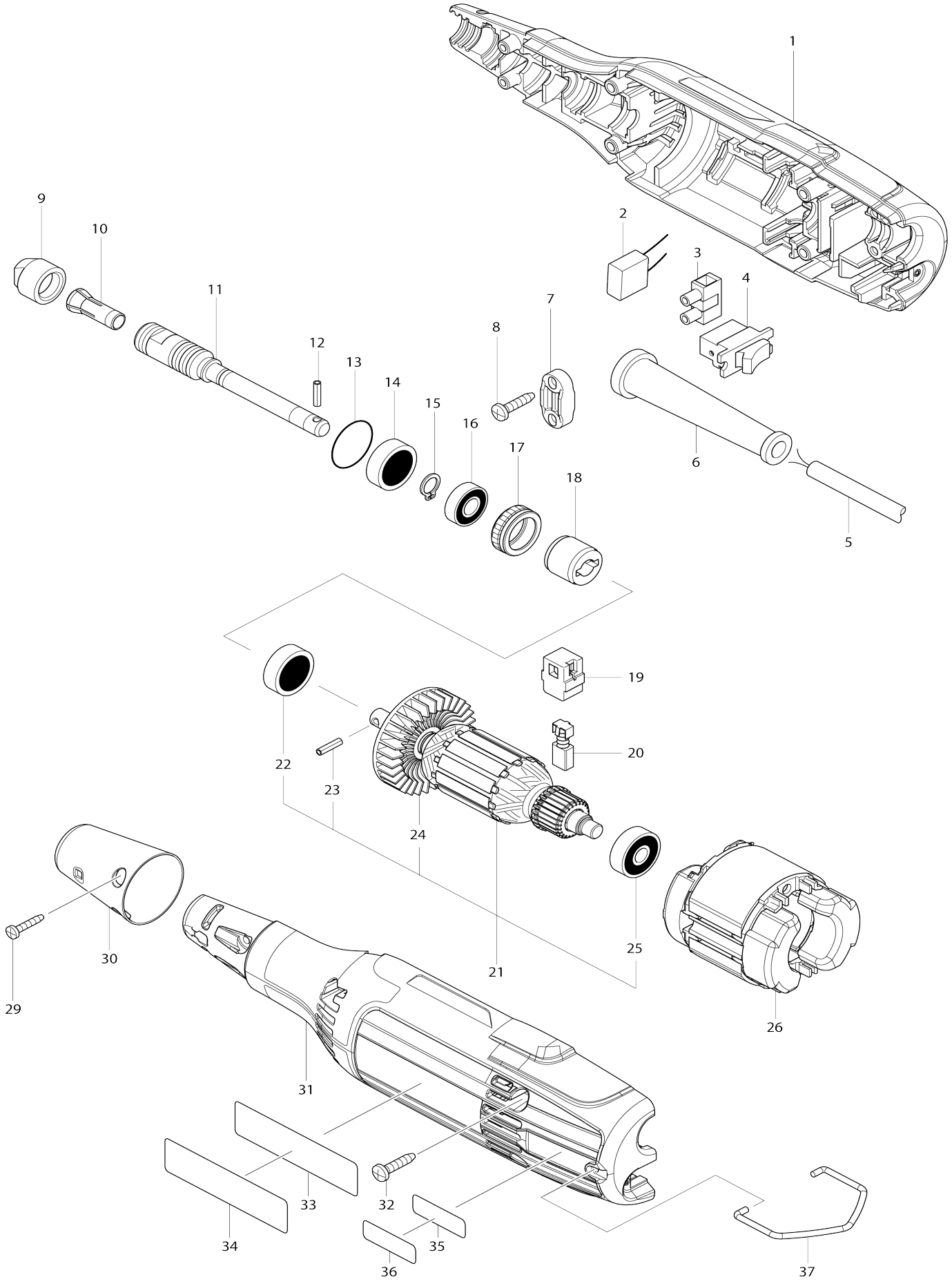

Model No.GD0603 DIE GRINDER

Item No.	Parts No.	Description	Interchangeability	Q'ty	New/ Old	Note1	Note2
001	183B62-6	HOUSING SET		1			
C10	263002-9	RUBBER PIN 4		2			
001		INC. 31					
002	645239-4	NOISE SUPPRESSOR		1			
003	654532-5	TERMINAL BLOCK 1P		1			
004	651527-9	SWITCH		1			
005	665394-6	POWER SUPPLY CORD 1.0-2-2.5		1			
006	682569-2	CORD GUARD 8-85		1			
007	687124-5	STRAIN RELIEF		1			
008	266326-2	TAPPING SCREW 4X18		2			
009	763236-9	COLLET NUT6		1			
010	763620-8	COLLET CONE 6MM		1	*		
010-1	763620-8	COLLET CONE 6MM	O	1			
011	321194-1	SPINDLE		1			
012	258054-3	SPRING PIN 3-12		1			
013	213961-7	O RING 22		1			
014	211031-6	BALL BEARING 608LLB		1			
015	961004-6	RETAINING RING (EXT) S-8		1			
016	211166-3	BALL BEARING 698DDW		1			
017	421479-6	RUBBER RING 19		1			
018	456337-7	COUPLING		1			
019	643566-3	BRUSH HOLDER 5X8		2			
020	191627-8	CARBON BRUSH CB-64		1	*		
020-1	194968-1	CARBON BRUSH SET CB-64	O	1			
021	513434-3	ARMATURE ASS'Y 240V		1			
021		INC. 22-25					
022	211031-6	BALL BEARING 608LLB		1			
023	258054-3	SPRING PIN 3-12		1	*		
023-1	256368-4	GROOVED PIN 3-12	<	1			
024	240085-6	FAN 48		1			
025	210025-8	BALL BEARING 627LLB		1			
026	599062-8	FIELD ASS'Y 240V		1			
C10	654037-5	INSULATED TERM. FT1.25-M3		2	*		
C11	654409-4	TERMINAL VR1.25-3.5LB	O	2			
029	266429-2	TAPPING SCREW 3X16		2			
030	346902-9	CAP		1			
031	183B62-6	HOUSING SET		1			
C10	263002-9	RUBBER PIN 4		2			
031		INC. 1					
032	266326-2	TAPPING SCREW 4X18		4			
033	851G50-8	GD0603 NAME PLATE		1	*		
033-1	851G50-8	GD0603 NAME PLATE	<	1			
034	807G77-6	CLEAR LABEL		1	*		
035	851G55-8	GD0603 SERIAL NO. LABEL		1			
036	807G78-4	CLEAR LABEL		1	*		
037	321193-3	HANGER		1			
A01	781003-0	WRENCH 10		2	*		

A01-1	781036-5	WRENCH 10	O	2			
A02	741614-3	WHEEL POINT 1-19-60		1	*		
A03	741615-1	WHEEL POINT 4-19-60		1	*		
A04	741809-8	DRESSING STONE		1	*		
A05	199105-2	WHEEL POINT SET EN		1			
C10	741614-3	WHEEL POINT 1-19-60		1			
C20	741615-1	WHEEL POINT 4-19-60		1			
C30	741809-8	DRESSING STONE		1			

Please state Parts No. when your order.

Print Date 17/10/2024